amateur radio

Vol. 38, No. 1
JANUARY, 1970
Registered at G.P.O., Melbourne, for transmission by post as a periodical
Price 30 Cents

WIRELESS INSTITUTE OF AUSTRALIA

Cook Bicentenary Award

This is to Certify that

.....

has this day submitted to the Wireless Institute of Australia satisfactory evidence of having conducted two-way radio communication with Australian Amateur Radio Stations during the year 1970, the Bicentenary of the discovery of the Eastern Coast of Australia by Captain James Cook aboard the H.M.S. Endeavour in 1770.

This certificate is issued to .....

in recognition of this excellent performance.

Date.....

.....
President

Certificate No.....

Founded 1910

Merry Christmas and Happy New Year to all our Clients

REALISTIC DX-150 SOLID STATE COMMUNICATIONS RECEIVER

Features: 240v. a.c. or 12v. d.c. operation. 30 transistors and diodes. 535 Kc. to 30 Mc. in four bands. Bandspread tuning, "S" meter, a.m./c.w./s.s.b. Product detector for s.s.b. Compact size, 14⅛ x 9¼ x 6½ in. Polished metal panel, small internal speaker.

F.O.R. Price $229.50

Matching external speaker £13.30 extra.

No. 62 TRANSCEIVERS

Wireless Set No. 62 Mk. 2 (Pye). Frequency range 1.6 to 10 Mc. in two bands, in-built 12v. genemotor power supply. Clean condition. Fully air tested on transmit and receive.

F.O.R. Price $49.50 inc. circuit diagram

WESTON LM-300 MOBILE TAXI RADIO

Low Band a.m. 60 Kc. bandwidth, 70-80 Mc. Crystal channel locked, single channel. In-built transistor power supply, 12v. operation, suit country taxi service or conversion to Ham bands, inc. microphone and cradle.

F.O.R. Price $45. Packing 50c

AS NEW AND AIR TESTED

LAFAYETTE 5W. C.B. TWO-WAY RADIO*

Model HE-20, fully transistorised, solid state, 13 transistors, 10 diodes, 27.240 Mc. Provision for 23 channels, crystal channel locked, push-pull audio modulator, 455 Kc. mechanical filter, spotting switch for accurate reception, t.v.i. trap, 230v. a.c. and 12v. (positive or negative ground), in-built p.a. amplifier. **Ideal for fixed base station or emergency mobile,** including microphone and mobile cradle. Fibreglass helical aerial 4 ft. high, cowl mount. *Subject to P.M.G. approved licence.

F.O.R. Price $169.50 tax paid

for mobile use $$16.50 extra.

BENDIX BC-221 FREQ. METER

125 Kc. to 20 Mc., including a.c. power supply, **crystals,** calibration book, etc.

F.O.R. Price $49.50, packing 75c

TRIO COMM. RECEIVER MODEL 9R-59DE

Four-band receiver covering 550 Kc. to 30 Mc. continuous, and electrical bandspread on 10, 15, 20, 40 and 80 metres. 8 valves plus 7 diode circuit. 4/8 ohm output and phone jack. SSB-CW, ANL, variable BFO, S meter, sep. bandspread dial, i.f. 455 kc., audio output 1.5w., variable RF and AF gain controls, 115/250v. AC mains. Beautifully designed. Size: 7 x 15 x 10 in. With instruction manual and service data.

PRICE $175 inc. sales tax

Speaker to suit, type SP5D, $15 inc. tax.

MULTIMETERS

MODEL C-1000 POCKET MULTIMETER

1000 ohms per volt. AC volts: 0-10, 50, 250, 1000. DC volts: 0-10, 50, 250, 1000. DC current: 0-100 mA. Resistance: 0-150K ohms (3K centre). Two colour scale. Range selector switch. Dimensions: 3½ x 2¼ x 1 in.

Price $6.50 post free

MODEL 200H MULTIMETER

20,000 ohms per volt. DC volts: 0-5, 25, 50, 250, 500, 2500 (20,000 o.p.c.). AC volts: 0-15, 50, 100, 500, 1000 (10,000 o.p.c.). DC current: 50 uA., 2.5 mA., 250 mA. Resistance: 0-60K/6M ohm (scale centre 300, 30K ohm). Capacitance: 10 pF. to 0.001 uF./0.001 uF. to 0.1 uF. Db. scale: —20 db. to plus 22 db. Size 4½ x 3¼ x 1⅛ in.

Price $11.25 post 30c

MODEL CT330 MULTIMETER

20,000 ohms per volt. DC volts: 0-6, 6, 30, 120, 600, 1.2K, 3K, 6K. AC volts: 0-6, 30, 120, 600, 1.2K (10K o.p.v.). DC current: 0-0.06 mA., 60 mA., 600 mA. Resistance: 0-6K, 600K, 6M, 600Megohm (30, 3K, 30K, 300K ohm centre scale). Capacitance: 50 pF. to 0.001 uF., 0.001 uF. to 0.2 uF. Decibels: —20 to plus 63 db. Size approx. 5½ x 3⅝ x 1¾ in.

Price $16.75 post 30c

MODEL OL-64D MULTIMETER

20,000 ohms per volt. DC volts: 0.025, 1, 10, 50, 250, 500, 1000 (at 20K o.p.v.), 5000 (at 10K o.p.v.). AC volts: 0-10, 50, 250, 1000 (at 8K o.p.v.) DC current: 50 uA., 1 mA., 50 mA., 500 mA., 10 amps. Resistance: 0-4K, 400K, 4M, 40 Megohm. Db. scale: —20 to plus 36 db. Capacitance: 250 pF. to 0.02 uF. Inductance: 0-5000 H. Size 5¾ x 4⅛ x 1¾ in.

Price $19.50 post 30c

NEW MODEL US-100

Overload protection. Shockproof movement. Polarity switch. DC volts: 0-0.25, 1, 25, 10, 50, 250, 1000 (20K o.p.v.). AC volts: 0-2.5, 10, 50, 250, 1000 (5K o.p.v.). DC current: 1 mA., 25 mA., 500 mA. and 10 amp. AC current: 10 amp. Resistance: 0-50M ohm (centre scale 50), R x 1, 10, 100, 1K, 10K. Db. scale: —20 to plus 10, plus 22, plus 35, plus 50 db.

Price $28.75 post 40c

MIRROR SCALE

MODEL AS100/DP HIGH SENSITIVITY

100,000 ohms per vot DC. Mirror scale, protected movement. DC volts: 3, 12, 60, 120, 300, 600, 1200 (100K o.p.v.). AC volts: 6, 20, 120, 300, 600, 1200 (10K o.p.v.). DC current: 12 uA., 6 mA., 60 mA., 300 mA., 12 amps. Resistance: 2K, 200K, 20M, 200Megohm. Decibels: —20 to plus 63 db. Audio output: 6, 30, 120, 300, 600, 1200 volts a.c. Size 7½ x 5½ x 2¾ in.

Price $34.50 post 75c

MODEL A10/P GIANT (6½ inch) METER, CIRCUIT TESTER

30,000 ohms per volt DC with in-built signal injector, overload protected. DC vots: 0.5, 2.5, 10, 50, 250, 500, 1000 (at 30K o.p.v.), 5000 (at 10K o.p.v.). AC volts: 2.5, 10, 50, 250, 500, 1000 (at 10K o.p.v.). DC current: 50 uA., 1 mA., 50 mA., 500 mA., 1 amp., 10 amp. AC current: 1 amp., 10 amp. Resistance: 10K, 100K, 1M, 100 Megohm. Signal Injector: Blocking oscillator circuit with a 2SA102 Trans. Decibels: —20 to plus 63 db. Size: 6½ x 7¼ x 3¾ in.

Price $55 tax paid, post 75c

TE-16A TRANSISTORISED TEST OSCILLATOR

Frequency range: 400 Kc. to 30 Mc. in five bands. Modulated 800 c/s. sine wave. Modulation: 30 p.c. approx. Output Imp.: Low impedance. Dimensions: 5⅞ x 5⅞ x 3⅝ in. Weight: 1.5 lb.

Price $24 tax paid, post 75c

"NIKKA" 1 WATT TRANSCEIVERS

P.M.G. approved. Solid state, 14 transistors, circuit inc. r.f. stage. 27.240 Mc. (provision for two channels). Range boost circuit. Up to 10 miles in open country or water. Buzzer type call system. Squelch control. Complete with leather carrying case.

Price $175.00 Pair

NEW A.W.A. T.V. TUNER

Model 49806. Uses 6U8 and 6BQ7A.

Price $5.50 postage 50c

PACK OF RESISTORS

100 Resistors of ½ and 1 watt rating.

Price $1.75 post 20c

BRAND NEW SPEAKERS

2½ inch	8 ohms	Price	$1.75	Postage	20c
3 inch	8 ohms	,,	$2.00	,,	20c
4 inch	8 ohms	,,	$2.25	,,	20c
4 inch	15 ohms	,,	$2.25	,,	20c
3DX	8 ohms	,,	$3.95	,,	20c
3DX	15 ohms	,,	$3.95	,,	20c
6A7	8 ohms	,,	$5.50	,,	40c
6A7	15 ohms	,,	$5.50	,,	40c
8A7	8 ohms	,,	$7.20	,,	40c
8A7	15 ohms	,,	$7.20	,,	40c
12A9	8 ohms	,,	$18.75	,,	50c
12A9	15 ohms	,,	$18.75	,,	50c

Nett Price

NEW STEREO HEADPHONES

Large rubber earpiece. Frequency range 100 to 1500 cycles. 8 ohms impedance.

Price $6.75 post 30c

DELCO TRANSISTORS

Type 2N441	Price $2.40	postage 10c
Type 2N278	Price $6.00	postage 10c
Type 2N301	Price $2.50	postage 10c

LT91 RECTIFIER

20 Volt 2 Amp.

Price $1.50 post 10c

HAM

RADIO SUPPLIERS

323 ELIZABETH STREET, MELBOURNE, VIC., 3000

Phones: 67-7329, 67-4286 All Mail to be addressed to above address

We sell and recommend Leader Test Equipment, Pioneer Stereo Equipment and Speakers, Hitachi Radio Valves and Transistor Radios, Kew Brand Meters, A. & R. Transformers and Transistor Power Supplies, Ducon Condensers, Welwyn Resistors, etc.

amateur radio

JOURNAL OF THE WIRELESS INSTITUTE OF AUSTRALIA. FOUNDED 1910

JANUARY, 1970
Vol. 38, No. 1

Publishers:
VICTORIAN DIVISION W.I.A.
Reg. Office: 478 Victoria Parade, East Melbourne, Vic., 3002.

Editor:
K. E. PINCOTT VK3AFJ

Assistant Editor:
E. C. Manifold VK3EM

Publications Committee:
A. W. Chandler VK3LC
Ken Gillespie VK3GK
Peter Ramsay VK3ZWN
W. E. J. Roper (Secretary) VK3ARZ

Circulation—
Jack Kelly VK3AFD

Draughtsmen:—
Clem Allan VK3ZIV
John Blanch VK3ZQL
John Whitehead VK3YAC

Enquiries:
Mrs. BELLAIRS, Phone 41-3535, 478 Victoria Parade, East Melbourne, Vic., 3002. Hours: 10 a.m. to 3 p.m. only.

Advertising Representatives:
AUSTRALIAN MEDIASERV
21 Smith St., Fitzroy, Vic., 3065. Tel. 41-4962.
P.O. Box 108, Fitzroy, Vic., 3065.

Advertisement material should be sent direct to the printers by the **first of each month.**

Hamads should be addressed to the Editor.

Printers:
"RICHMOND CHRONICLE," Phone 42-2419.
Shakespeare Street, Richmond, Vic., 3121.

★

All matters pertaining to "A.R." other than advertising and subscriptions, should be addressed to:

THE EDITOR,
"AMATEUR RADIO,"
P.O. BOX 36,
EAST MELBOURNE, VIC., 3002.

★

Members of the W.I.A. should refer all enquiries regarding delivery of "A.R." direct to their Divisional Secretary and not to "A.R." direct. Two months' notice is required before a change of mailing address can be effected. Readers should note that any change in the address of their transmitting station must, by P.M.G. regulation, be notified to the P.M.G. in the State of residence; in addition, "A.R." should also be notified. A convenient form is provided in the "Call Book".

CONTENTS

Page

Technical Articles:—

A Solid State 432 Mc. Converter 5
Commonsense Transistor Parameters 11
For the Mobile Operators 26
One Way 15
Technical Correspondence: Plating of Coils 16
The Nature of Matter 9
1296 Mc. Solid State Converter 21

General:—

Australian DX Century Club Award 17
Australian D.X.C.C. Countries List 18
Australian V.H.F. Century Club Award 17
Australis Oscar 5 Launch due on 9th January 25
Correspondence 34
Cook Bi-Centenary Award 25
Diplome Albert Schweitzer 26
DX 28
Federal Awards 34
Federal Comment: Our Sixtieth Year 4
Mobile Marine Operation 34
New Call Signs 31
New Equipment 27
Overseas Magazine Review 29
Prediction Charts for January 1970 16
Rules for Gandhi Centenary W.R.I. Award 1969-70 26
Silent Key 34
The Rare Ones of New Orleans Certificate 26
VHF 33
VK3 National Parks Award 25

Contests:—

A.R.R.L. International DX Competition 16
B.A.R.T.G. Spring R.T.T.Y. Contest 16
Contest Calendar 33

COVER STORY

Featured on the front cover is a reproduction of the Cook Bi-Centenary Award Certificate issued to both Overseas and Australian Stations who, during 1970, make two-way radio contact with the required number of Australian Amateur Stations as set out on page 25.

Sideband Electronics Engineering

P.O. BOX 23, 33 PLATEAU ROAD, SPRINGWOOD, N.S.W., 2777. **Telephone (STD 047) 511-394**

Sydney showroom only, not for business transactions, 145a George Street, near Circular Quay, Mondays to Fridays, 0900 to 1700 hours. Telephone 27-5885

- Adequate stocks now of all **YAESU-MUSEN** equipment, procured directly from **Japan**, they cannot as yet afford an assembly plant in Hong Kong. For the various Y.M. sets my stock of spare parts include **all** crystals used, calibrators, voltage regulators, tone oscillators, VFO blocks, relays, chokes, valves, power transformers, etc., etc.
- Prices and stocks are as advertised in my November and December 1969 ads., with the following additions and a few price changes:
- **YAESU-MUSEN 6 and 2 Metre** solid state **Converters,** 10 metre band output, **$25.**
- **KOKUSAI Mechanical Filters**, 2.7 Kc/s. bandpass, ½" x ½" x 1¾" modern miniature size, with input-output transformers and matching USB/LSB carrier crystals, **$40.**
- At half the original cost, two sample Japanese 10 to 80 metre Ham bands Receivers, AM, CW, SSB reception, S meters, 240V. AC built-in power supply:
  UNICA SR-600, built-in speakerette, **$35.**
  UNICA SR-700, 1600 kc. i.f. crystal filter, calibrator, **$60.**
- **NEWTRONICS** 10 to 40 metre four-band **Verticals**, type 4-BTV, **$55.** Same with 80 metre top-loading coil, **$70.**
- All **SWAN** and **GALAXY** equipment on indent order basis only. SW350C **$545.**
- **HY-GAIN** TH6DXX, on indent order basis, **$210.**

Again, A MERRY CHRISTMAS AND HAPPY NEW YEAR TO ALL . . . Arie Bles.

The World's Most Versatile Circuit Building System!

SIZES: 1/8" and 1/16" WIDTHS

Length: 100 ft. roll, 5 ft. card

IDEAL FOR PROTOTYPE AND PRODUCTION CONSTRUCTION

USEFUL FOR WIRING REPAIRS

★ **NO DRILLING** ★ **FAST** ★ **NO MESS**

Available from all Leading Radio Houses

Marketed by—

ZEPHYR PRODUCTS PTY. LTD.

70 BATESFORD RD., CHADSTONE, VIC., 3148

Telephone 56-7231

ZEPHYR

MANUFACTURERS OF RADIO AND ELECTRICAL EQUIPMENT AND COMPONENTS

BULGIN *The Choice of Critics* **BULGIN**

PRECISION MADE

JACKS AND JACK PLUGS

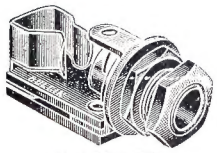

List No: J.2

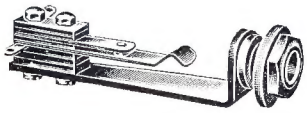

List No: J.12

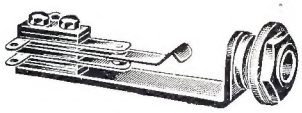

List No: J.13

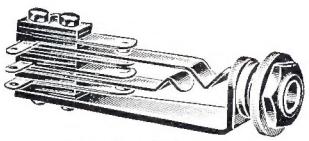

List No: J.15

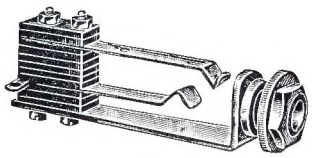

List No: J.16

List No: P.38

This complete Range of slender Panel Jacks, conforming fully to **B.S. 666,** covers practically every switching and contacting requirement, in all kinds of circuits and is suitable for a wide range of equipment and apparatus. Highest grades of B.S. Materials and Finishes are used, including strong, rustproofed steel brackets, springiest Number-5 P.O. –grade NICKEL SILVER blades, and pure FINE SILVER contacts. Many of these Jacks in continuous use have given two decades, or more, of service.

Nuts and Bushes, Electro-plated hard gold to 0.15 micro-m. approx., can be supplied if required.

NEW THREE-POLE SIDE ENTRY JACK PLUG

List No. P.537
Chrome finish

The third 'Ring' contact between the 'Sleeve' and 'Tip' can serve as a guard-ring or as a third pole, or 'Sleeve' can carry screening continuity of 2-pole + screen cable.

TECHNICAL DATA AND DIMENSIONS

List No.	Ideogram	Description
J.2 J.11		Single-leaf: general purpose: outlet for 'phones, L.S., etc. Open circuit jacks.
J.12		As **J.11**, plus leaf to close circuit upon unplugging.
J13.	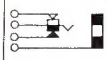	As **J.12**, plus third leaf, contacted with plug 'in.'
J.14		As **J.16**, with circuit-closing leaves.
J.15	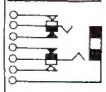	As **J.14**, plus circuit-making leaves.
J.16	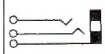	Plug-sleeve contacts a leaf as well as plug-tip.
J.17	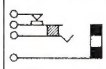	As **J.11**, plus switching (L.T.), 'ON' with plug 'in.'
J.18		As **J.11**, plus switching (L.T. etc.), 'ON with plug 'out.'
J.19	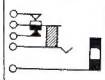	As **J.11**, plus switching (L.T. etc.), S.P.C.O.
J.20	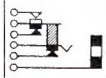	As **J.19**, plus closed-circuit contact as **J.12.**
J.21	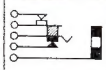	As **J.12**, plus switching (L.T. etc.), 'ON' with plug 'in.'
J.22	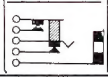	As **J.12**, plus switching (L.T. etc.), 'ON with plug 'out.'

Sole Agents: **R.H. Cunningham PTY. LTD.**

Available from all Leading Radio Houses

Write, Phone or Call us for Technical Leaflets

608 COLLINS STREET, MELBOURNE, VIC., 3000
64 ALFRED STREET, MILSONS POINT, N.S.W., 2061
34 WOLYA WAY, BALGA, PERTH, W.A., 6061
L. E. Boughen & Co., 30 Grimes St., Auchenflower, Qld., 4066

RHC 1

FEDERAL COMMENT:

Our Sixtieth Year

In 1910 the use of v.h.f. and higher bands for regular communication was only a dream. In those days a satellite circling the earth transmitting on Amateur frequencies and extending those bands so that they could be used for international communication was not even a dream.

In 1970 the Wireless Institute of Australia will be preparing its case on behalf of the Australian Amateur Service to retain its existing allocations at frequencies which could not even be used 60 years ago. We shall also see the first Australian Amateur satellite circling the earth. In 1970 Amateurs will continue to fight their way through congestion on overcrowded h.f. bands that have a density of Amateur population that would have seemed incredible sixty years ago.

In 1910 the Wireless Institute of Australia was formed. In sixty years the primary objectives of the organisation have changed as has the character of our hobby generally. Whereas once Radio Amateurs' interests followed almost identical lines, today the ability to be interested in a great diversity of modes, techniques, and frequencies is the characteristic of the hobby. Amateurs have, of course, always been interested in experimentation and communication, the former leading to the latter.

Today the same is true but in many different ways and on many different bands. But as our hobby has grown more sophisticated and diverse, so have the pressures on Amateurs becoming increasingly complex and diverse. No longer can the shorter wave bands be abandoned to Amateurs as being of no use to anyone else.

Radio frequency has become one of the most valuable resources of the world today. Amateurs must now justify their retention of their bands in competition with a multitude of other users. As the pressures have increased on Amateur frequency allocations as the years have passed, so has the importance of a strong organisation representing the Amateur Service, grown. The organisation started sixty years ago is today a significant voice in our country in relation to the question of frequency allocations—it has to be, as strong national organisations of Amateurs throughout the world is our only defence for the very continuation of our hobby.

This year then, marks the sixtieth anniversary of the Wireless Institute of Australia. We can indeed be proud of the fact that we are the oldest Radio Society in the World. This year we shall honour the past and the foresight of our founders and at the same time we shall take time to reflect on how much technology has advanced in those sixty years. Starting in the March issue, "Amateur Radio" shall be publishing a history of the Wireless Institute of Australia written by former Federal President, Max Hull.

From the 1st January, Australian Amateurs have the privilege of using the alternative prefix "AX" instead of the prefix "VK". The Rules of the Cook Award celebrating the fact that 1970 is also the Cook Bi-Centenary year, have been circulated to over seventy societies and publications overseas. These Rules are re-printed in this issue of "Amateur Radio". Nearly a quarter of a million commemorative QSL cards have been printed and distributed to Amateurs throughout Australia. All Divisions will be conducting functions highlighting the sixtieth birthday of the Wireless Institute of Australia. A feature will be the dinner in Adelaide conducted by the South Australian Division in conjunction with the Federal Convention.

Once again, I urge all members to participate in the activities that are planned for this year. We have printed 1,000 Certificates for the Cook Award. It is hoped that you will like the design which is featured on the front cover of this issue. Federal Executive would indeed be happy to find that it has not printed sufficient Certificates.

But let us above all else, make this a year for strengthening our own organisation. The late John Moyle, coming home from the I.T.U. Conference in Geneva in 1959, wrote:

> "... We must obtain a much greater sense of Federal responsibility from the ordinary Amateur and from the Divisions. At the moment this sense is at its lowest ebb and has been for years. Coming straight from Geneva where our very future was being battled for, I was astounded and discouraged to find that Divisions had voted against holding a Convention this year. At the very time when our future and past organisation is of primary importance, the Federal Council was not to meet, apparently because it couldn't think of anything important enough to discuss. We must find councillors and Divisional leaders who have much wider vision than this or our excellent, and often elaborate, Divisional set-ups will be of little use if we haven't the bands to use them. Secondly, we must evolve a Federal set-up which will work and will attract councillors of high standing and experience who can tackle the job of improving our own standing and priority in the communications world. At present the Federal Council isn't doing its job and Federal Executive has become exhausted trying to cope with an almost impossible situation. . . . I do say that unless we are prepared to solve the problem and to spend money doing it we can't blame F.A.S.C. or anyone else if they overlook Amateur claims because we are inadequately organised to handle them. To my mind it is an urgent and critical situation."

Let us examine ourselves in our sixtieth year to see whether today, ten years after John Moyle wrote that, we can still be subject to the same criticism. Let us in 1970 seek a vastly increased membership. Let us do all in our power to add to the strength and stability of our organisation which is, in the last resort, the only real means of defence that we have.

—MICHAEL J. OWEN, VK3KI,
Federal President, W.I.A.

A SOLID STATE 432 Mc. CONVERTER

Developed by the VK3 V.H.F. PROJECTS COMMITTEE

IN keeping with the function of the Projects Committee of the VK3 V.h.f. Group, that is to develop for interested Amateurs "state of the art" (as best we know it) projects, a 432 Mc. solid state converter has now been made available.

Amateurs who have in the past, either built their own converters on the v.h.f bands or have assembled any of the converter kits developed by this Group, should have a minimum of difficulty in the construction and final alignment of this latest project. Any Amateur who has only the basic knowledge of transistors and tuned circuits should not be deterred, he may require just a little more time and patience.

To construct this converter you will require the following equipment. A grid dip oscillator or any other signal generator capable of producing a signal at the first i.f. frequency and at 432 Mc. This may be with either a fundamental or a harmonic. And, lastly, a reasonably high input impedance d.c. voltmeter, capable of reading down to about 5 volts d.c. full-scale deflection.

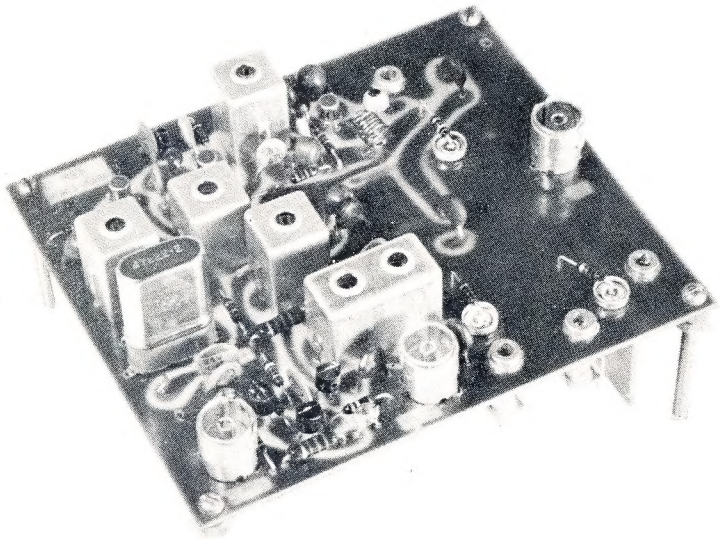

DESIGN CONSIDERATIONS

Initially the converter was designed to satisfy a number of needs and these are mentioned briefly in the following.

(a) Field effect transistors were selected because of the interent low cross modulation characteristics, as well as exhibiting reasonable gain and noise figure. The device selected was the u.h.f. field effect transistor manufactured by Texas Instruments TIS88/2N5245.

The 2N5245/TIS88 has a quoted device noise figure of 4 db. maximum with a minimum gain of 10 db. at 400 Mc. in neutralised common source configuration. In theory it would be possible only to achieve the device n.f. if the device was followed by stages having zero n.f., i.e. impossible; however, in practice, as can be seen from the formulae below, if the first stage has adequate gain (say in excess of 10 db.) and the following stage has reasonably low n.f. (say less than 10 db.), then the total n.f. is almost entirely determined by the first stage.

$$\text{Noise Factor} = 10 \log \text{Noise Figure} \quad \ldots (1)$$

$$\text{N.Fa. (total)} = \text{N.Fa. (1st stage)} + \frac{\text{N.Fa. (2nd stage)}}{\text{Gain 1st stage}} + \text{etc.} \quad \ldots (2)$$

where N.Fa. = Noise Factor.

(b) For best performance and adaptability the converter should be double conversion where a low tunable i.f. is desired. This has been accomplished by using a first i.f. in the 52 Mc. region: by having such a high first i.f., image responses have been reduced to a negligible level and desensitising of the r.f. amplifier by local oscillator injection has been avoided. This permits use of tunable i.f. as low as broadcast band to be used. Where a high tunable i.f. is desired (20 Mc. upwards) a single conversion is adequate. The circuit of the double conversion converter is shown in its entirety by Fig. 1. The single conversion section is on the same diagram and is designated as the double conversion unit **less** those components within the dotted boxes.

The single conversion mode is from 20 Mc. upwards. This arrangement allows for a large number of output possibilities, i.e. as a single conversion unit to feed an existing 6 metre converter, or in the case of Amateur Television, into a commercial television set via a 4:1 balun on a suitable channel, e.g. Channel 0 in Sydney, Adelaide, Perth, or Channel 1 in Melbourne, Brisbane and Tasmania. In the case of double conversion up to 18 Mc. for a second i.f., a suitable system can be selected to allow for oscillator injection either on the low or high side of 432 Mc. so as to obtain forward or reverse tuning.

(c) The converter was to have sufficient gain that the unit was readily usable with tunable i.f. receivers of relative low sensitivity, such as car receivers and AR7s, etc.

(d) Finally, that the complete kit should be of low cost.

DESCRIPTION

The first amplifier stage in common with all stages that carries the r.f. signal, consists of 2N5245. The r.f. amplifier has strip lines in the gate (L1) and drain (L3) circuits to ensure a high operating Q. The input line (L1), which is tuned to resonance by the trimmer C1, is tapped at the 50 ohm input impedance point, to ensure matching to co-axial cables. The first stage is decoupled from the positive supply rail by the 390 ohm resistor R13 and the feed-through capacitor C6. Similar decoupling of the source is obtained by the feed-through capacitor C5 between the source of Q1 and the 220 ohm resistor R22.

Neutralising of the r.f. amp. Q1 is readily accomplished with L2 which resonates with the drain to gate feed back capacitance to form a high impedance parallel resonant circuit at 432 Mc. The output signal at L3 is coupled to the input strip line L4 of the mixer Q2. This line is made to resonate by the trimmer C3. Injection of the oscillator frequency is from the 10 pF. (C17) to the tap on the mixer strip line. Decoupling at 432 Mc. of the mixer Q2 source lead is again via a feed-through capacitor C7 between Q2 and the 2.7K ohm source resistor (R14).

Selection of the required output frequency is by the drain series tuned

* W.I.A. Victorian Division, P.O. Box 36, East Melbourne, Vic., 3002.

circuit of L5 and the 10 pF. capacitor (C12). The parallel resonant circuit of L6 and 10 pF. (C11) completes the band-pass filter at the required first i.f. frequency. A low impedance tap nominally 50 ohms unbalanced is provided in L6 so as an output can be obtained after the first i.f. This can be fed to a t.v. set (after matching) or to another converter if only a single conversion converter configuration is required.

L6 and C11 make the input circuit to the second mixer Q3 which has been designed to have the link L13 in the source.

The crystal fundamental frequency is injected and the correct level into the second mixer via this link. The load of the second mixer is the untuned 4.7K ohm (R18). As the gain of this configuration drops very fast above 30 Mc. and the crystal fundamental frequency is usually above 40 Mc., the unwanted frequencies are effectively filtered out.

Coupling to the i.f. amplifier (Q4) is by the 0.002 uF. capacitor C10 to the gate resistor 100K ohm (R17). The gain of this stage is very large and it is recommended that the source by-pass capacitor C8 be left off (allowing a small amount of negative feed back) until it is established that more gain from the converter is required for good reception.

The output stage in the signal chain is via a direct coupled source follower Q5, providing low impedance, so as co-axial cable or tunable i.f. can be adequately matched to the converter.

The crystal oscillator and accompanying frequency multiplier chain requires some comment in detail, as this is the stage that most difficulty will be encountered.

The crystal oscillator uses a bipolar transistor (Q6); this enables reliable and stable operation even with crystals of low activity. The oscillator is zener regulated at 9.1 volt from the positive supply rail by R1 which is 220 ohms, or 390 ohms should the diode be omitted. Adjustment to exact crystal frequency is possible with L7. The maximum of frequency shift is about 10 Kc. at 432 Mc., and any attempt to exceed this will result in the crystal ceasing to oscillate reliably.

The crystal fundamental is taken from the emitter of Q6 via the dividing network of the 10 pF. (C21) and 100 pF. (C23) capacitors and passed via the 10 pF. (C22) to L12. This coil is tuned to the crystal fundamental and ensures that a pure sine wave is transferred to the link L13 for injection into the second mixer. The collector load of Q6 is tuned to twice the crystal frequency (around 90 Mc.), enabling the oscillator to also act as a doubler. The output of the oscillator is fed to the base of the second multiplier stage via a capacitive matching network of 6.8 pF. (C26) and the 18 pF. (C30). The output is from L9 which has been tuned to four times the crystal frequency (approx. 170-200 Mc.). This makes the second stage also a frequency doubler.

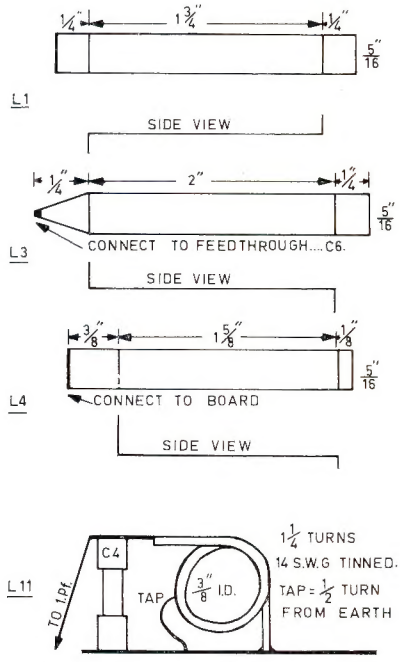

FIG. 2. V.H.F. COIL DIMENSIONS.

The last stage normally operates as a frequency doubler. However, where an output is required in the broadcast band in Channel 0 areas, this stage will be a tripler. The input to Q8 is again from a capacitive dividing network of 3.3 pF. (C27) and 10 pF. (C33). The collector load is an r.f. choke and the injection frequency is transferred via the 1 pF. (C28) capacitor to the parallel tuned circuit of L11 and C4. The correct injection level for the first mixer is obtained by the two 10 pF. (C29, C17) capacitors which are in series with the taps on coils L11 and L4.

A supply voltage of 12 volts at approx. 30 mA. is required. However, unlike previous projects, the negative supply rail is not isolated from earth; this could not be conveniently done without substantially increasing the complexity of the converter board layout.

The converter is constructed on an epoxy fibre glass printed circuit board of 4" x 4½" which has had the copper surfaces gold plated to eleviate problems associated with skin effects and soldering. All the fixed capacitors below 100 pF. are NPO or NT50 ceramic, whilst 100 pF. and above are Hi-K disc ceramic or mylar. Resistors must be of small dimension. Ratings up to ¼ watt are suitable although ½ watt in many instances can be used with almost zero lead length.

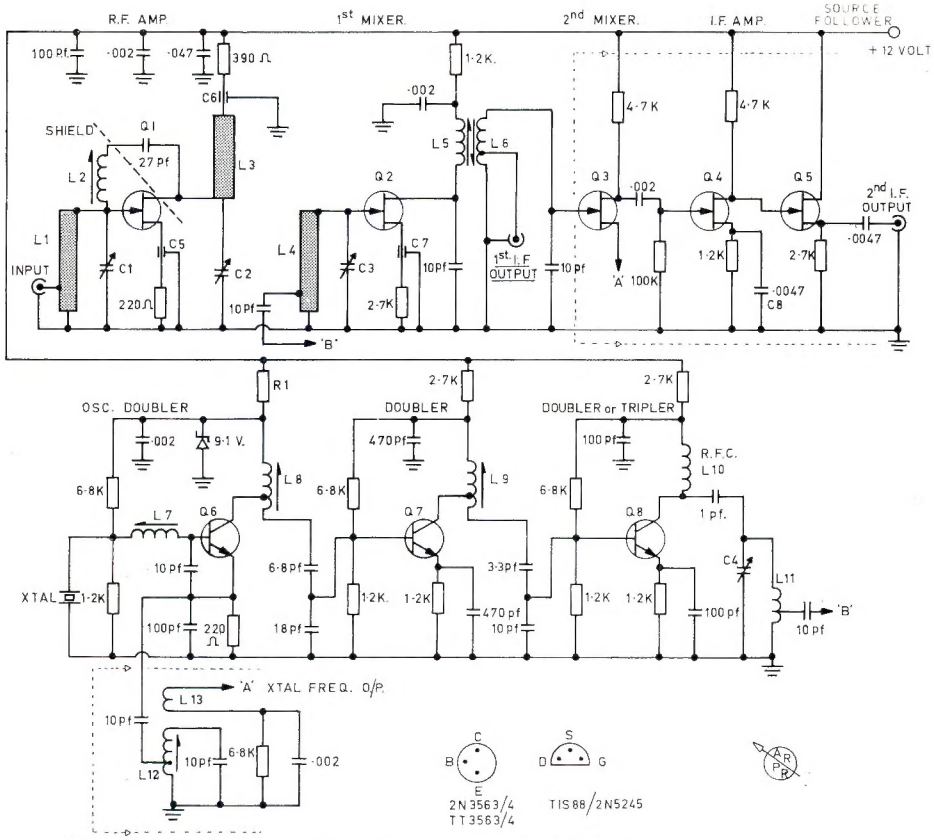

FIGURE 1. VK3. V.H.F. GROUP. 432 MHz CONVERTER. CIRCUIT DIAGRAM.

C1, C2, C3, C4—1-6 pF. u.h.f. trimmers.
C5, C6, C7—470 pF. u.h.f. feed-throughs.
C8, C9—0.0047 uF.
C10, C13, C15, C16, C19—0.002 uF.
C11, C12, C17, C18, C22, C23, C29, C32—10 pF.
C14—0.047 uF.
C20, C21, C25, C33—100 pF.
C24, C31—470 pF.
C26—6.8 pF.
C27—3.3 pF.
C28—1 pF.
C30—18 pF.

R1—220 ohm or 390 ohm (see text).
R2, R6, R7, R8, R9, R16, R21—1.2K ohm.
R3, R5, R10, R15—6.8K ohm.
R4, R22—220 ohm.
R11, R12, R14, R20—2.7K ohm.
R13—390 ohm.
R17—100K ohm.
R18, R19—4.7K ohm.
Q1, Q2, Q3, Q4, Q5—TIS88/2N5245.
Q6, Q7—TT3563, TT3564, or 2N3563, 2N3564.
Q8—TT3563 or 2N3563.

All the coil formers used are Neosid type A (single) and the type B (double) with screening cans on all coils except L2. Bases of these formers have not been used, instead, a 7/32" hole is drilled in the board and the formers glued directly into the board. In all cases F29 v.h.f. slugs are used for tuning.

PERFORMANCE

All prototypes measured were with noise figures in the vicinity of 3.9 to 6 db. These figures were measured with a Rhode and Swartz type STKU noise generator.

The gain of the converter is adequate for all reasonable applications, with the conversion gains of the double and single conversion prototypes measuring in excess of 35 db. and 22 db., respectively. With all tuned circuits peaked for 432.0 Mc., the 3 db. bandwidth was about 2½ Mc. The noise figure was substantially constant over this range. The bandwidth is quite adequate for normal operation in this part of the band. However, should the converter be required for Amateur t.v. a bandwidth of 7 Mc. is easily obtained by stagger tuning, but some slight sacrifice of gain and noise figure will be noticed. In all instances, the noise figure was noted to be better than comparable valve converters.

No cross modulation measurements were made; however on-air tests showed good performance with strong adjacent signal conditions. No diode protection was found necessary on the r.f. amplifier of the converter, as the 2N5245 have reverse breakdown of 30v. and a maximum forward gate current rating of 50 mA.

CRYSTAL SELECTION

All crystals are type "D", third overtone, and the choice of crystal frequency will depend on whether double or single conversion is used. Each group will now be mentioned.

(a) **Single conversion** is recommended for i.f. frequencies above 20 Mc. and will fall into possibly one of the following catagories:

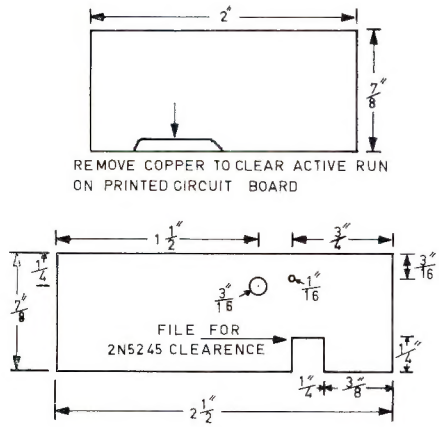

FIG. 3 R.F. SHIELDS.

(1) 6 metre output to be connected into an external 6 metre converter of acceptable design.
(2) Either Channel 0 or 1, or, if desired a higher frequency, depending on the area for Amateur Television.
(3) For use with a good quality communication receiver either on the 10 or 15 metre bands.

We have included the formula for single conversion and some examples have been calculated (see Table 1):

$$\text{Crystal frequency} = \frac{432 - \text{I.F.}}{8}$$

I.F. Mc.	Crystal Frequency Mc.
52 to 54	47.5
28 to 30	50.5
21 to 23	51.375

Table 1.

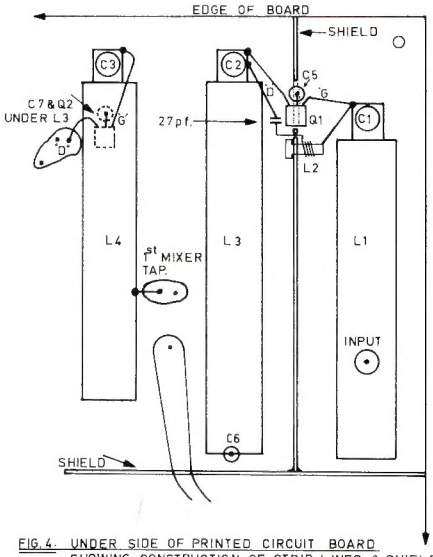

FIG. 4. UNDER SIDE OF PRINTED CIRCUIT BOARD SHOWING CONSTRUCTION OF STRIP LINES & SHIELDS

(b) **Double conversion.**—Most of the double conversion frequencies are acceptable, however where the first i.f. falls within either Channel 0 or 1, the converter will need to be shielded to stop very strong t.v. signals from these stations breaking into the first i.f. The same situation may occur if the first i.f. is in the 6 metre band where strong local signals exist from Amateur stations. These restrictions, we feel, are not of a very serious nature, as many Amateurs will agree it is a good practice to have any converter shielded.

Because of the number of variables in double conversion, i.e. crystal, first i.f. and second i.f. frequencies, we have included a sample calculation and a short table (Table 2 or Table 3) of some of the more common second i.f. frequencies.

(i.) Forward tuning:—

$$\text{Crystal} = \frac{432 - \text{Second I.F.}}{9} \quad \ldots (1)$$

$$\text{First I.F.} = \text{Xtal} + \text{Second I.F.} \quad \ldots (2)$$

$$\text{Osc. Inject. Freq.} = \text{Xtal} \times 8 \quad \ldots (3)$$

If a second i.f. of 7 Mc. to 9 Mc. is required, then substituting 7 Mc. in equation (1), we obtain a crystal frequency of 47.2222 Mc. Taking this value and transferring it into equation (2) we arrive at a figure for the first i.f. frequency of 54.2222 Mc. and the oscillator injection frequency of 377.777 Mc. as calculated by equation (3).

Second I.F. Mc.	Crystal Mc.	First I.F. Mc.	
0.6 to 1.6	47.9333	48.5333	(1)
2 to 4	47.7777	49.7777	(1)
4 to 6	47.5555	51.5555	(1)
4.5 to 6.5	47.5000	52.0000	(2)
6 to 8	47.3333	53.3333	
7 to 9	47.2222	54.2222	
8 to 10	47.1111	55.1111	
9 to 11	47.0000	56.0000	(3)
12 to 14	46.6666	58.6666	(3)
14 to 16	46.4444	60.4444	(3)

Table 2.

Notes: (1) Channel 0 may interfere.
(2) 6 Metre may interfere.
(3) Channel 1 may interfere.

A further variation of the forward tuning mode is possible if Channel 0 interference is contemplated.

Broadcast band: Crystal 39.2181 and first i.f. is at 38.6181. The last doubler in the multiplier chain is changed to a tripler, injection is both above 432 Mc. and the crystal frequency. A similar situation exists when tuning 3.5 Mc. and above. Crystal equals 38.9545 Mc. and the first i.f. is 35.4545 Mc. The formulae for calculating the crystal frequencies in these cases are as follows:

$$\text{Crystal} = \frac{432 - \text{Second I.F.}}{11}$$

$$\text{First I.F.} = \text{Crystal} - \text{Second I.F.}$$

(ii.) Reverse tuning: This may be required in areas where interference from Channel 1 is contemplated, when a second i.f. between 9 and 15 Mc. is used.

$$\text{Crystal} = \frac{432 + \text{Second I.F.}}{9}$$

$$\text{First I.F.} = \text{Crystal} - \text{Second I.F.}$$

An example of this, say the receiver tunes 14 to 15 Mc., then 15 Mc. corresponds to 432 Mc. and 14 Mc. corresponds to 433 Mc.

Second I.F. Mc.	Crystal Mc.	First I.F. Mc.
5 to 3	48.5555	43.5555
7 to 5	48.7777	41.7777
15 to 14	49.6666	34.6666

Table 3.

COIL DATA

L2—4 turns 22 B. & S. enamel wire, close wound and spaced 1/16" out from shield.

L5—10½ turns 26 B. & S. enamel wire, close wound.

L6—9½ turns 26 B. & S. enamel wire, close wound, tapped at 2½ turns from earth end.

L7—18 turns 30 B. & S. enamel wire, close wound.

L8—10½ turns 26 B. & S. enamel wire, spread over most of former, tapped at 3 turns from hot end.

L9—4½ turns 26 B. & S. enamel wire, spread over half the length of the former, tapped at 1¼ turns from hot end.

L10—R.F.C.—5½ turns 3/16" i.d. 26 B. & S. enamel wire. Close wound, spread to resonate on desired frequency.

L11—1¼ turns 14 S.W.G. tinned, close wound, tap at ½ turn from earth end.

L12—14½ turns 30 B. & S. enamel wire, close wound, tapped at 5½ turns from cold end.

L13—2¾ turns 26 B. & S. enamel wire, close wound, close coupled to L12 on same former.

Note.—

L5 and L6 will tune 46-64 Mc. Adjust turns to suit own i.f. if necessary.

L12/L13—L12 closest to board.

CONSTRUCTION

Complete construction details will be supplied with the kits made available from the VK3 Division. However, those not wishing to obtain the kit, a few hints may be welcome.

First mount on the board the co-axial sockets, crystal socket, the feed-through capacitors from the top of the board and the trimmers from the copper side. The method can be easily seen by examining the photographs with this article.

Locating lands on the Neosid former should be filed off and the formers glued into the board with Araldite, making sure that the formers line up correctly with the holes in the cans. When the Araldite has set hard, all coils on the top of the board can then be wound. The cans should now be soldered on to protect the coils.

All the components on the top of the board can now be mounted, as well as L11 on the underside of the board as shown in Fig. 2. Prepare strip lines and shields as shown in Figs. 2 and 3. Cement the Neosid former into the shield, by inserting into the hole from L3 side of shield.

Mount Q2 above C7 with the source lead as short as possible. Solder the drain and gate connection in that order. Position and solder L4 into place above Q2. Solder tap from C17 onto the edge of mixer line, L3 can now be fitted into place. Carefully solder into place above C5 the FET Q1, ensuring absolute minimum source length. Place the shield between L1 and L3 into place and run solder along the length of the board. L1 can now be installed and the tap connected from the input connector. The last shield is now installed, solder is run along the junction of the two shields and along the board. Make sure that the copper path between C17 and C29 does not foul the shields. The neutralising circuit can now be completed. See Fig. 4.

Much has been mentioned about the soldering of FETs and bipolar transistors and we strongly recommend that you re-read the articles previously published by the Project Committee. One further point worth mentioning here is to ensure that the board be floating above earth whilst soldering takes place. Take the example where soldering irons similar to the scope are used. If both sides of the secondary winding of a transformer are floating from earth, electrostatic coupling between primary and secondary may couple a high voltage (several megohms impedance) to the secondary, even at this high impedance, the voltage still could become sufficient to damage the gate junction of the device, earthing one side of the secondary will overcome this. However, with both the board and one side of the transformer earthed, there could be during its operation in excess of ½ volt r.m.s. between the earthed transformer secondary and the earthed barrel, due to the very high current in the lead (approx. 30 amp.). Assuming 1v. peak, this is equivalent to a supply of low impedance and whilst soldering the device if there is insufficient circuit resistance to limit the current (50 mA. maximum gate current 2N5245, or 10 mA. for MPF102/6/7 and 2N3819), the gate to source junction acts as a forward based diode and excessive current can easily destroy the device.

The Projects Committee always advocates that the best protection is to isolate the board from earth whilst soldering transistors and FETs.

ALIGNMENT

Fit crystal and connect to power supply (12 volts). Wind L12 slug fully in. Adjust L7 and L8 for maximum d.c. change across R7, the emitter resistor of the second multiplier Q7. Connect the voltmeter across the emitter resistor R9 and the third multiplier Q8 and peak L9 for maximum d.c. change.

Adjust the trimmer C4 across L11 for maximum change across the emitter resistor R14 of the first mixer Q2. Spread or compress the R.F.C. (L10) in conjunction with the above adjustment for maximum volts as above. Connect the voltmeter across the source resistor R15 of the second mixer Q3. Screw out the slug of L12 and notice the magnitude of the change. After determining this, set the slug to read one-third of maximum change.

Feed a signal of the first i.f. frequency in via the first i.f. output coaxial socket and tune L6 for maximum signal strength in the tunable i.f.

An aerial can now be connected to the input socket, tune C1, C2 and C3 for maximum signals, either from a local 432 Mc. station or from a signal generator (either a fundamental or harmonic).

Adjust L2, the neutralising coil, for maximum r.f. amplifier stability. It is now advisable to re-peak all coils again with the exception of L12. Final alignment may be carried out with the aid of a simple noise generator if available, or with weak off-air signals.

AVAILABILITY

A number of kit sets will be made available later this month, depending on delivery of components from overseas. The price of the kits, less crystal, will be: Double conversion $22.00 post paid, and single conversion $18.50 post paid.

The double conversion unit is shown in its entirity in Fig. 1, whereas the

(Continued on Page 25)

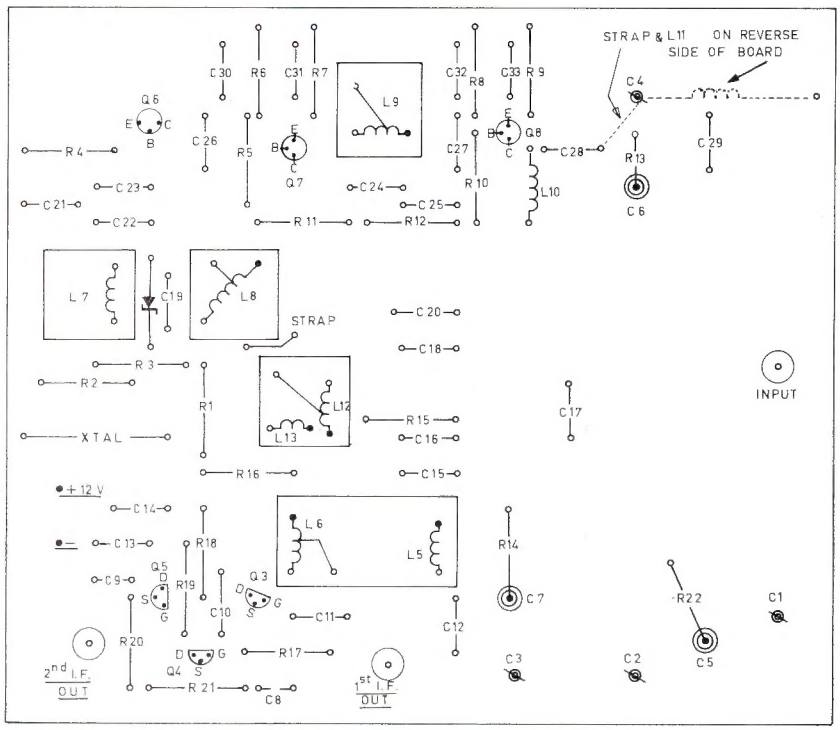

FIG. 5. COMPONENT LAYOUT 432 MHz. CONVERTER.

THE NATURE OF MATTER

LECTURE NO. 1

C. A. CULLINAN,* VK3AXU

IN order to obtain any Radio Certificate it is necessary to have a good understanding of The Nature of Matter, hence this series of lectures starts with this subject mainly in the form of definitions.

ELEMENT

The name of a chemically individual unit of matter. There are 90 elements found in nature, plus two which can only exist in nature for a short time. In addition, there are 11 transuranic elements which have been created by man in atomic reactors, atom smashers and similar devices.

ATOM

The smallest material particle of a given element, measuring a hundred millionth of a centimeter in diameter, $1 \div 100{,}000{,}000$, or 1×10^{8} cm.

Its weight is about 1×10^{22} gramme.

Atoms are made of electrons orbiting around a central nucleus.

COMPOUND

A group of atoms which are chemically linked, e.g. pure water consists of the two elements hydrogen and oxygen, mixed in the ratio of two atoms of hydrogen and one atom of oxygen.

MOLECULE

The smallest amount of a compound which can exist as such. Any further division would result in dividing up into its individual elements. A molecule of pure water is H_2O. Further division would result in obtaining two atoms of hydrogen and one atom of oxygen.

ELECTRON

An infinitesimal atomic particle carrying a unit electrical charge (normally negative), i.e. a negatively charged particle. The diameter of an electron is $5 \div 10{,}000{,}000{,}000$ cm. In an atom, one or more electrons orbit around a positively charged nucleus. Electricity is a flux of electrons. All radio work is based on the use of electrons and we will deal, later, more fully with electrons.

NUCLEUS

This is a condensation of matter at the core of the atom, it carries a positive electric charge around which electrons orbit. Nuclear energy is derived from this core.

PROTON

A "heavy" particle in the nucleus carrying a positive electrical charge. There are as many protons in an atom as there are electrons (for a neutral atom).

NEUTRON

Another "heavy" particle on the nucleus. It is electrically neutral and is a constituent of atomic nuclii. It is free neutrons which cause the splitting or fission of the nuclii in heavy elements, such as uranium U235. There are other particles in the nucleus but these do not concern us to any extent.

* 6 Adrian Street, Colac, Vic., 3250.

● A series of Lectures presented by C. A. Cullinan, VK3AXU, at Broadcast Station 3CS for students studying for a P.M.G. Radio Operator's Certificate.

It is assumed that the student has a knowledge of Mathematics to the Intermediate Certificate level of the Victorian Education Department.

ATOMIC NUMBER Z

(Not to be confused with the symbol Z used in electrical work to represent the word impedance.)

The atomic number is that given to each element, in an orderly table, by its chemical classification. It is equal to the number of protons or electrons. It does not take into account neutrons or other particles in the atom. Hydrogen is the lightest element, having 1 proton and 1 electron, hence its atomic number is 1. Uranium is the heaviest neutral element with 92 protons and 92 electrons, atomic number 92. The heaviest of all elements is man-made and to date is Lawrencium. Discovered in 1961, its atomic number is 103 and its chemical symbol is Lw.

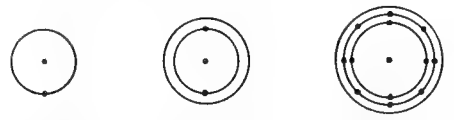

Hydrogen (H)
1 proton
1 external electron.

Lithium (Li)
3 protons
2 internal electrons
1 external electron.

Sodium (Na)
11 protons
2 internal electrons
8 intermediate electrons
1 external electron.

The chemical behaviour of an atom is determined by the electrons in its outer shell. It is by changing electrons in the outer shells that some elements can mix to become compounds.

However, the so-called rare gases cannot mix chemically to form compounds as the external shells of their atoms already possess all possible electrons for that element.

Element	Possesses External Electrons	Atomic Number
Helium (He)	2	2
Neon (Ne)	8	10
Argon (A)	8	18
Krypton (Kr)	18	36
Xenon (X)	18	54
Radon (Rn)	32	86

These gases are chemically inert because each of their outermost shells has complete electron-saturation.

Mass Number A.—This is the total number of protons and neutrons in the neucleus and is so named as almost the whole of the weight of an atom is in the nucleus.

Isotope.—This is the name given to the varieties of an atom, varieties which are chemically the same, but physically are different. An isotope is defined by the name of the element and a number consisting of the atomic number and the mass number.

Let us examine uranium. Any sample of natural uranium, no matter how treated chemically cannot be divided into any other form of uranium, although it can be combined with other elements to form compounds. However, by elaborate mechanical or electrical means it is possible to get three different lots of uranium, each chemically the same, but having certain physical differences because the number of neutrons are different in each lot of uranium, although the number of protons are the same.

For example:

U234—atomic number 92 plus 142 neutrons—234.
U235—atomic number 92 plus 143 neutrons—235.
U238—atomic number 92 plus 146 neutrons—238.

Atomic Weight.—The atomic weight is now taken as the weight of one atom of any element, compared with the weight of one atom of carbon which has been arbitarily given a weight of 12 exactly. The atomic weight is the weighted mean of all the isotopes being considered. Atomic weight has no units, such as grammes, etc. The mass is checked with a Spectrometer. Numbers in brackets indicate that the element is unstable and has a constantly changing nucleus.

Electron Arrangement.—The number of electrons in each orbit or shell, from inner to outer.

IONS

In some atoms the electrons in the outer shells are held loosely and in certain conditions may become completely disassociated with the atom. The atom then becomes an ion, the process being known as ionisation.

An atom which has lost an electron in this way is known as a positive ion as the positive charge in the nucleus now exceeds the negative charge in the remaining electrons.

A negative ion is an atom which has captured one or more electrons, and as a result the negative charge in the electrons is greater than the positive charge in the nucleus. Thus ions can be considered as an electrical imbalance in an atom, compared with the neutral state, and caused by the loss or gain of one or more electrons.

So far we have studied matter from the view-point of a single atom. However, the smallest amount of any element which is familiar to us consists of millions of atoms, so we must consider now, how these atoms cling together to make masses of an element, particularly in the solid state, rather than in the liquid or gaseous states.

Many years ago, Max von Laue experimented with x-rays by photographing them after they had passed through a crystal of copper sulphate. He found that diffraction of the x-rays took place and that the regularity of crystal shapes was due to the arrangement of their basic atomic units.

Today the x-ray diffraction technique is widely used in industry; of interest to us in determining the correct "cuts" for making quartz crystal plates for use in the oscillators in transmitters, also it is used in the manufacture of transistors.

BONDING OF ATOMS

But what holds one atom to another? This is a bonding force of electrical attraction between the negatively charged electrons of one atom and the total positive charge of another atom.

There are four types of such bonds, and it is the minute differences between such bonds that account for the particular properties of such solid substances.

Ionic Bonding.—This type of bonding exists in the crystals of common salt because one atom of the sodium loses one electron to an atom of chlorine (common salt is sodium chloride), thus creating ions (charged particles) having strong attraction to each other.

Covalent Bonding is the name of the bond in which one atom shares one or more of its electrons with another atom. This bond produces a material of exceptional hardness. The classic examples are the diamond and graphite, which are both pure carbon.

Metallic Bonding is the name given to the special bonding of metals.

Alpha and Beta particles cause intense ionisation in the matter which they penetrate. Gamma rays also cause ionisation.

RADIO ACTIVITY

This is the expulsion by a nucleus, which has an excess of energy, of one or more particles or of energy in the form of radiation. There are three forms:

Alpha Activity.—The expulsion of a group of two protons and two neutrons. This is a helium nucleus or alpha particle.

Beta Activity.—The expulsion of an electron from the nucleus. The capture of one of the orbiting electrons (negative) is the equivalent of the emission of positive Beta emission.

Gamma Activity.—This is the emission of ultra short-wave electro-magnetic radiation.

All three of these emissions are harmful to human life.

Heat, also. can cause ionisation.

(Continued on Page 14)

MODERN TABLE OF THE ELEMENTS

Atomic Number	Name		Atomic Weight	Electron Arrangement (inner to outer orbit)
1	Hydrogen	H	1.0080	1
2	Helium	He	4.0026	2
3	Lithium	Ll	6.939	2–1
4	Bergllium	Be	9.0122	2–2
5	Boron	B	10.811	2–3
6	Carbon	C	12.011	2–4
7	Nitrogen	N	14.007	2–5
8	Oxygen	O	15.999	2–6
9	Fluorine	F	18.998	2–7
10	Neon	Ne	20.183	2–8
11	Sodium	Na	22.990	2–8–1
12	Magnesium	MG	24.312	2–8–2
13	Aluminium	Al	26.982	2–8–3
14	Silicon	Sl	28.086	2–8–4
15	Phosphorus	P	30.974	2–8–5
16	Sulphur	S	32.064	2–8–6
17	Chlorine	CL	35.453	2–8–7
18	Argon	Ar	39.948	2–8–8
19	Potassium	K	39.102	2–8–8–1
20	Calcium	Ca	40.08	2–8–8–2
21	Scandium	Sc	44.956	2–8–9–2
22	Titanium	Ti	47.90	2–8–10–2
23	Vanadium	V	50.942	2–8–11–2
24	Chromium	Cr	51.996	2–8–13–1
25	Manganese	Mn	54.938	2–8–13–2
26	Iron	Fe	55.847	2–8–14–2
27	Cobalt	Co	58.933	2–8–15–2
28	Nickel	Ni	58.71	2–8–16–2
29	Copper	Cu	63.54	2–8–18–1
30	Zinc	ZN	65.37	2–8–18–2
31	Gallium	GA	69.72	2–8–18–3
32	Gernianium	Ge	72.59	2–8–18–4
33	Arsenic	AS	74.922	2–8–18–5
34	Selenium	SE	78.96	2–8–18–6
35	Bromine	Br	79.909	2–8–18–7
36	Krypton	Kr	83.80	2–8–18–8
37	Rubidium	Rb	85.47	2–8–18–8–1
38	Strontium	Sr	87.62	2–8–18–8–2
39	Yttrium	Y	88.905	2–8–18–9–2
40	Zirconium	Zr	91.22	2–8–18–10–2
41	Niobium	Nb	92.906	2–8–18–12–1
42	Molybdenum	Mo	95.94	2–8–18–13–1
43	Technetium	Tc	(99)	2–8–18–13–2
44	Ruthenium	Ru	101.07	2–8–18–15–1
45	Rhodium	Rh	102.91	2–8–18–16–1
46	Palladium	Pd	106.4	2–8–18–18
47	Silver	Ac	107.87	2–8–18–18–1
48	Cadmium	Cd	112.40	2–8–18–18–2
49	Indium	In	114.82	2–8–18–18–3
50	Tin	Sn	118.69	2–8–18–18–4
51	Antimony	Sb	121.75	2–8–18–18–5
52	Tellurium	Te	127.60	2–8–18–18–6
53	Iodine	i	126.90	2–8–18–18–7
54	Xenon	X	131.30	2–8–18–18–8
55	Caesium	Cs	132.91	2–8–18–18–8–1
56	Barium	Ba	137.34	2–8–18–18–8–2
57	Lanthanum	La	138.91	2–8–18–18–9–2
58	Cerium	Ce	140.12	2–8–18–19–9–2
59	Praseodymium	Pr	140.91	2–8–18–21–8–2
60	Neodymium	Nd	144.24	2–8–18–22–8–2
61	Promethium	Pm	(147)	2–8–18–23–8–2
62	Samarium	Sm	150.35	2–8–18–24–8–2
63	Europium	Eu	151.96	2–8–18–25–8–2
64	Gadolinium	Gd	157.25	2–8–18–25–9–2
65	Terbium	Tb	158.92	2–8–18–26–9–2
66	Dysprosium	Dy	162.50	2–8–18–28–8–2
67	Holmium	Ho	164.93	2–8–18–29–8–2
68	Erbium	Er	167.26	2–8–18–30–8–2
69	Thulium	Tm	168.93	2–8–18–31–8–2
70	Ytterbium	Yb	173.04	2–8–18–32–8–2
71	Lutetium	Lu	174.97	2–8–18–32–9–2
72	Hafnium	Hf	178.49	2–8–18–32–10–2
73	Tantalum	Ta	180.95	2–8–18–32–11–2
74	Tungsten	W	183.85	2–8–18–32–12–2
75	Rhenium	Re	186.2	2–8–18–32–13–2
76	Osmium	Os	190.2	2–8–18–32–14–2
77	Iridium	Ir	192.2	2–8–18–32–15–2
78	Platinum	Pt	195.09	2–8–18–32–17–1
79	Gold	Au	196.97	2–8–18–32–18–1
80	Mercury	HG	200.59	2–8–18–32–18–2
81	Thallium	Ti	204.37	2–8–18–32–18–3
82	Lead	Pb	207.19	2–8–18–32–18–4
83	Bismuth	Bi	208.98	2–8–18–32–18–5
84	Polonium	Po	(210)	2–8–18–32–18–6
85	Astatine	At	(210)	2–8–18–32–18–7
86	Radon	Rn	(222)	2–8–18–32–18–8
87	Francium	Fr	(223)	2–8–18–32–18–8–1
88	Radium	Ra	(226)	2–8–18–32–18–8–2
89	Actinium	Ac	(227)	2–8–18–32–18–9–2
90	Thorium	Th	232.04	2–8–18–32–18–10–2
91	Protactinium	Pa	(231)	2–8–18–32–20–9–2
92	Uranium	U	238.03	2–8–18–32–20–9–2
93	Neptunium	Np	(237)	2–8–18–32–22–9–2
94	Plutonium	Pu	(242)	2–8–18–32–24–8–2
95	Americium	Am	(243)	2–8–18–32–25–8–2
96	Curium	Cm	(247)	2–8–18–32–25–9–2
97	Berkelium	BK	(247)	2–8–18–32–27–8–2
98	Californium	Cf	(249)	2–8–18–32–28–8–2
99	Einsteinium	Es	(254)	2–8–18–32–29–8–2
100	Fernium	Fm	(253)	2–8–18–32–30–8–2
101	Mendelevium	Md	(256)	2–8–18–32–31–8–2
102	Nobelium	No	(254)	2–8–18–32–32–8–2
103	Lawrencium	Lw	(257)	2–8–18–32–32–9–2

COMMONSENSE TRANSISTOR PARAMETERS*

R. L. GUNTHER,† VK7RG

THE principal characteristics of transistors are many, and they can be presented as an imposing array of facts or as a few simple principles. Unfortunately for simplification, transistor behaviour is rather complicated, and oversimplification is charming but not very useful. In the following discussion, I attempt to present The Transistor Story in as commonsense and painless manner as possible, but there are still many details. If you want the Good Oil on transistors, you'll have to settle in and read it all patiently.

Further details may be found, among other places, in the "Grandma's Tests" series of 1967 issues of "The Australian E.E.B.", and in the Transistor Manuals by R.C.A., G.E., and Motorola. A particularly lucid though elementary treatment is given in the "Semiconductor" chapter of "Basic Radio Course" by "Electronics Australia".

That strange name, "Grandma's Tests" arose from author R. S. Maddever's observation that the best way to handle transistors is to do it the way Grandma did with eggs: try them and see. That is our approach too.

POWER RATING

Like many transistor ratings, this is a myth. If you try to put 30w. into a "30w." transistor, you'll be sorry, particularly if that rating assumes an infinite heat sink ("case 25°C."). And then we have the interesting fact that the same transistor may be rated at "100w." by the Americans and at "30w." by everyone else. Ignoring the possibility that Americans do everything bigger, there are two practical approaches possible, both bad:

You can simply aim to dissipate at most, one-half of the maximum rating (preferably the most pessimistic one), and hope for the best. Or you can apply power gradually in a test system using the same heat sink (if any), until the transistor gets hot. A germanium one should not become more than "pretty warm," and silicon should not boil water.

"P_{AMB}" or equivalent is the maximum power a transistor can take just sitting in "free" air. But the air in those test labs is a lot cheaper than inside your congested chassis, and healthy derating would be prudent.

"P_{CASE}" or equivalent means that the power transistor can suffer unless the case is kept at some certain temperature. Often this is specified at 25°C. (about 77°F.), but this is absurd, because the only way you can meet that is to feed it zero power, or use an infinite heat sink. Infinite heat sinks are expensive, and more useful is to derate at a given number of watts per degree, as given in the Specifications (or Specs of similar transistors), aiming for a maximum operating temperature of 60-90°C. for silicon if you are brave. For reference: 100°C. boils water or you.

A bad, though useful rule of thumb is: use one square inch of heat sink (e.g. measured on one side of a flat piece) for every watt to be dissipated, if the temperature of the transistor (or diode) is allowed to reach 60°C. (140°F.) **above** "ambient temperature". "Ambient temperature" is the hottest temperature your semiconductor will reach without passing current, and includes heat from nearby transistors, transformers, valves, resistors, etc.

A word of caution: very small semiconductors, as diodes, do not have much heat capacity. If you touch them, your finger will draw out some heat. The back of a finger or hand is more sensitive, a lip even more so; but I stopped that lip-nonsense after a careless embrace with an angry diode. Rod Reynolds points out that it is very important to remove voltage from a semiconductor before feeling it; his voice has the ring of truth, and I suspect the fruit of a vivid experience.

CURRENT RATING AND CURRENT GAIN

Equally aprocryphal. If you plan to use a transistor as a switch, you can run the maximum "rated" current through it if the voltage is low enough. For ordinary voltages you must keep the current low enough not to exceed the power rating: $P_C = V_{CE} \times I_C$. In other words you cannot run both "rated" current **and** voltage at the same time.

At worst, P_C must not exceed the practical power rating. At best, the current should not be large enough to degrade the current gain, β (or h_{FE}).

To a first approximation, $\beta = I_C/I_B$, where I_C = collector current, I_B = base current to produce that I_C. As I_C increases from zero, β increases up to a point, and then as I_C is increased further, β goes down—fast. Don't be surprised, therefore, if the transistor you are running at 1 mA. has enough gain. The value from the books may be specified for I_C = 10 mA., or something. Murphy's Law requires that if you were operating at 10 mA., the manufacturer would have specified the gain at 1 mA.

The more β varies with collector current, the less linear is the transistor. Some transistors, like the Fairchild 2N4250, AY1115 and 2N4354 are extremely linear over a wide range of collector currents, but most are not this good. Poor linearity means high distortion, and if you want to eliminate distortion you will have to use negative feedback, or valves—or FETs. FETs tend to be considerably more linear than ordinary (bipolar) transistors.

I must mention here that although β is usually considered to be "current gain", it is only so if the load resistance is below about r_C/β (e.g. 1K for low power transistors). Otherwise β is somewhat higher than actual current gain obtained, although I shall continue to describe β as "current gain" as a useful approximation. It is interesting to realise that β bears the same relationship to transistors as does μ for valves, so the proper name for β is "current amplification factor", just as that for μ is "(voltage) amplification factor".

MAXIMUM VOLTAGE RATING

This rating is so confusing that we can disregard published values altogether. You cannot necessarily depend on the voltage rating of bought-transistors. If they are disposals type (often advertised as "new"), the rating may be lower (or higher) than advertised. If they are commercial types, the ratings are likely to be higher than in the catalogue, though the increasing popularity of Improved American ratings tends to reduce this margin of safety.

In a number of Fairchild and Mullard transistors tested, the voltage ratings were appreciably higher than listed in the specs. sheets. They do this, presumably on purpose, to give their transistors a reputation for reliability, because the concept of liberal safety factors for semiconductor ratings is not yet universally appreciated. It is possible that the extra ratings allow for "production spread", but there does not seem to be evidence for this in practice —at least in the degree found.

In any event, you can only depend on a given rating if you test it yourself, and when you do that you can get more performance out of semiconductors—as discussed in the recent articles on Computer Transistors ("A.R.," Aug., Sept., Dec., 1969).

ABSOLUTE MAXIMUM VOLTAGE RATING

Then there is the problem about inflexible semiconductors. In general, the maximum peak voltage actually in your circuit (including transients) should never exceed one-half the absolute maximum voltage rating. This rule should never be violated.[1] But what is the "absolute maximum rating"? It is the value beyond which destruction of the transistor becomes virtually inevitable. Stories to the contrary involve the abovementioned hidden safety factors, or occasionally marginal effects. Those stories also do not always take into account the fact that there are several different types of transistor voltage ratings, as described adequately in the articles on Computer Transistors ("A.R.," Aug., Sept., Dec., 1969).

With large resistance in the base circuit, the collector breakdown voltage will be relatively low: BV_{CEO}. With small resistance, it will be higher: BV_{CES}. In between it will be BV_{CER}, depending on R. This is particularly relevant for transistors used as Class C

* A considerably amplified version of an article printed originally in the Bulletin of the Tasmanian Division, W.I.A., Feb. 1968.

† 32 Waterworks Road, Dynnyrne, Tas., 7005.

1. Well, hardly ever; see "EEB," Sept. 1968.

r.f. amplifiers, where the problem of collector voltage rating may be important. If the load is reactive and/or the collector is modulated, you need the highest voltage rating, and the most resistance you will want in the base circuit is that of an r.f. choke or base link. If you use a base-leak resistor, voltage rating of both collector and base (for practical purposes) go down, and drive must be controlled carefully.[2]

FREQUENCY RATING

Although this subject has been treated very well by the G.E. "Transistor Handbook" and Mullard "Reference Manual of Transistor Circuits," there is some room for simplification. In the following discussion I shall present commonsense rules of thumb about frequency ratings, and practical examples. There is some detail, but it is necessary to enable you to use transistors more effectively.

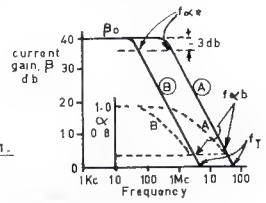

Fig. 1.—Frequency response.
A: 015, 065, etc. B: 033, 083, etc.
Slope equals 6 db./octave, and 20 db./decade.

Figs. 1 and 2 show the basic material of the subject as the books tell it—here applied to computer board transistors. Although the Figures look complicated, we can get useful results from them quickly and easily. To do this we must look at the language of frequency.

Assume that a given transistor has a current amplification factor, $\beta_0 = 100$. That subscript nought refers to the fact that the gain is measured at 1 Kc. or so.

Assume that it has a power gain, PG = 35 db. (that's really a power gain of 3,160, but it sounds more impressive to engineers to say db. = 10 log P_2/P_1).

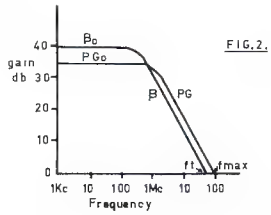

Fig. 2.—Typical alloy diffused type (015, 065, etc.)

In Fig. 1, $f\alpha_B$ is the Alpha cut-off frequency, being the frequency at which α (current "gain" of common-base amplifier) is down by 3 db. (i.e. by 30%, because for everything except power, now db. = 20 log F, where F is the factor comparing before and after. Here $F = \alpha_2/\alpha_1$).

In Figs. 1 and 2, $f\alpha_E$ is the Beta cut-off frequency when the common-emitter circuit is used; it is the frequency at which β is 3 db. down. In this instance, the initial 100 has fallen to 70.7.

2. See "EEB," August and September, 1967, July 1968.

In Figs. 1 and 2, f_T = gain-bandwidth product, simply the frequency at which $\beta = 1.0$, which is more useful than you think, as we shall see.

In Fig. 2, f_{MAX} is the frequency at which PG = 1.0, and theoretically the maximum frequency of oscillation.

Note that $f\alpha_B$ is about the same as f_T (more or less), therefore considerably more gain can be obtained at high frequencies from the common-base than the common-emitter configurations.

If the frequency of operation is much above $f\alpha_E$, the gain falls off at the rate of 6 db. per octave, being merely an obscure way of saying that gain halves every time frequency doubles (also: 20 db. per decade; doesn't that sound impressive?). When this happens we get the very useful relationship[3] that

$$f_T = \beta \times f$$

where $f > f\alpha_E$

and

$$f\alpha_E = f_T/\beta_0$$

with useful implications: gain can be traded for bandwidth, $f\alpha_E$, by selection of β_0, or by feedback. There are numerous other trade-offs (i.e. compromises) which can be made with transistors, cranky beasts that they are, and a knowledge of them can increase transistor amplifier performance, and reduce experimenter frustration[4] considerably. They can also lead to the design of more stable amplifiers, and that will be the subject of my next article in these pages.

The f_T relationship has another practical consequence. In the data sheets you will often see h_{FE} (β) specified at a given high frequency. If you know that $f_T = h_{FE} \times f$, you can obtain the value for f_T immediately by simple multiplication. Nice, eh? (Practical example of this below.)

Once we know f_T, what can we do with it? It is a conveniently succinct measure of transistor frequency capability: maximum practical usable frequency will generally be not more than one-half f_T for common-emitter, and the gain is looking pretty sick at that point, not to mention the greater tendency toward instabilities which have to be neutralised and unilateralised (resistive neutralisation). In common-base, maximum usable frequency will be at least f_T and likely well beyond, but the instability problem becomes acute at the limit, and neutralisation is not as easy.

For high frequency transistors, f_{MAX} is generally larger than f_T, and the actual amount larger depends on some complicated matters involving base resistance and collector capacitance.

For the AF106, for example, $f_{MAX} = 5.5\ f_T$, for the AFX11, $f_{MAX} = 2 \times f_T$, while for the 2N917, they are nearly equal.

The rule of thumb about maximum practical frequency being some half f_T is, therefore, a rather loose one, but it does give you a general guide to start on.

3. I appreciate that many Amateurs do not like algebra, but I see no reason to be silly about it. If you need a valve, you use a valve and not a relay. If you need a formula, it saves a page of babytalk.

4. "Efficiency Trade-offs in R.F. Power Amplifiers," "EEB," May 1968. And R.C.A. "Silicon Power Circuits Manual," p. 116.

A practical measure of high frequency performance of a transistor is its maximum frequency of oscillation in your **own** test oscillator; details have been described in "Computer Transistors, Part II." in "A.R." Dec. 1969. The frequency so obtained may be designated "f_{OSC}," but is not to be confused with f_{MAX}. The latter is the maximum frequency you are supposed to be able to obtain, but it is largely an illusion. f_{OSC} will give you a realistic characteristic, although it will only be a relative one, depending on the characteristics of your equipment.

AN EXAMPLE

Let's come out of the clouds with an example. Consider the STC 2SC32 silicon mesa transistor. The data sheet shows β of 2.0 at 100 Mc. Using the handy formula given above,

$$f_T = \beta \times f,$$
$$f_T = 2.0 \times 100 \text{ Mc.}$$
$$= 200 \text{ Mc.}$$

That looks pretty impressive, but now let's use the second formula.

If the transistor has a gain, β_0 of 50 at 1 Kc.,

$$f\alpha_E = f_T \div \beta_0$$
$$= 200 \text{ Mc.} \div 50$$
$$= 4 \text{ Mc.}$$

This is the frequency at which the common-emitter gain starts to drop appreciably, and looks a lot less impressive than does 200 Mc., doesn't it? Between that 4 Mc. and the 200 Mc., the current gain is roughly halving every time the frequency doubles (viz. "6 db. per octave"); the power gain is falling at about that rate too, sometimes faster. See Fig. 3.

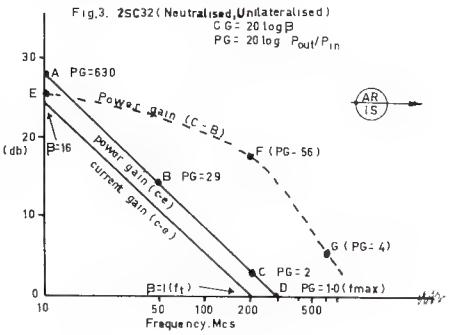

Fig. 3.

To operate at 20 metres this impressive-looking transistor will have moderate current gain indeed, and at 5 metres it is nearly useless. There is only one trouble with this brilliant argument: it does not conform to the facts. Let's look a little deeper.

CURRENT GAIN VS. POWER GAIN

We are accustomed to talk about voltage gain in valves, so since a common-emitter circuit looks much like an ordinary valve circuit, we just make that into current gain, and all seems well. But it isn't. Owing to the low impedances of the transistor, we must consider only (or mostly) **power** gain for useful purposes. Why? Consider a typical transmitter using 2SC32s.[5] They

5. "A Two-Watt Six Metre Transmitter," K. M. Kelly, VK7LL, "EEB," Jan. 1969.

work fine at 50 Mc.; power gain of about 15 db. allows a single 2N3643 (Fairchild) to drive two 2SC32s to about 1w. output. And yet, from Fig. 3, current gain is only about 4. The answer lies in some simple relationships, all derived from Ohm's Law.

Since $P = I^2R$, it would seem reasonable that power gain (current gain)^2 (resistance gain), but in practice a Murphy's factor of 5 must be included to make it come out right. Thus:

$$PG = \beta^2 \times 0.2 \times (r_{OE} \div r_{IE}) \quad \text{(approximately)}$$

where resistance gain, RG, $= r_{OE} \div r_{IE}$ (or $RG = 1 \div h_{OE}\ h_{IE}$),[6] essentially a measure of the output vs. input resistance of the transistor. Note that PG here is actual magnitude, not db. db. = 10 log PG.

POWER GAIN IN A REAL CIRCUIT

Now if we apply that formula to a few typical conditions, we obtain data as in Table 1.

The figures for the typical low power transistor (from G.E. "Transistor Manual") are given for comparison, and would be relevant for a collector current of about 1 mA. The effect of running 50 mA. through the 2SC32 at the higher frequency has, as you can see at Point A, the effect of lowering resistance and gain appreciably. The resistance gain, however, stays pretty constant up to $f_T = 200$ Mc., but since β falls at 6 db./octave, power gain falls steadily with frequency. At 50 Mc. (point B) it is still large enough to run Doc. Kelly's transmitter. At $f_T = 200$ Mc. (point C), there isn't much left, for practical purposes. At $f_{MAX} = 300$ Mc. (point D) there is still no current gain, but now the transistor has turned into a very leaky sieve, there are dire phase shifts, resistance gain suddenly falls to nothing, the transistor is a dead short, and who cares.

Fig. 3 Point	Transistor Type	Frequency	Internal Output Resistance	Internal Input Resistance	Resistance Gain	β	Power Gain
	Low Power	1 Kc.	40KΩ	1.5KΩ	27	50	67½K = 49 db.
A	2SC32	10 Mc.	900Ω	75Ω	12	16	310 = 25 db.
B	,,	50 Mc.	390Ω	39Ω	10	3.8	32 = 15 db.
C	,,	200 Mc.	100Ω?		ca. 10	1.0	2 = 3 db.
D	,,	300 Mc.	0		0	1.0	1 = 0 db.

Tabe 1.

This dreadful point is f_{MAX}, and is of interest to engineers, who appear to have wonderous oscillators which can oscillate just up to that point, for which reason "f_{MAX}" is short for "$f_{OSC\ MAX}$".

Now it so happens that

$$f_{MAX} = f \sqrt[2]{PG}$$

and this has a commonsense use in giving us a springboard to calculate useful values of power gain.

Thus, if we make a reasonable assumption that the minimum useful PG = 9.0 (= 9.5 db.), then

$$f_{MAX} = f \sqrt[2]{9}$$

and

$$f = f_{MAX} \div 3$$

Here $f_{MAX} = 300$ Mc., so $f = 300$ Mc. $\div 3 = 100$ Mc.

This means that our 2SC32 with f_{MAX} of some 300 Mc. could be used usefully as a power amplifier up to about 100 Mc., in spite of the fact that at that frequency the current gain is only about 2.[7] Nice, huh? This is obviously more useful than f_T although you can see now where we got the rough rule of thumb that maximum practical frequency of amplification is $\frac{1}{4}$ to $\frac{1}{2}$ of f_T—assuming neutralisation, unilateralisation, excellent geometry, and good fortune.

THE USES OF COMMONSENSE

There is yet another interesting trick you can perform with f and PG.

I mentioned in a preceding section that in common-base, the transistor could be used up to f_T and well beyond. Let's see how that works. If we readjust our previous formula slightly,

$$PG = \alpha^2 \times (r_{OB} \div r_{IB})$$

where as before, $r_{OB} \div r_{IB}$ is resistance gain.

With an ordinary low power transistor, output resistance might be 1.5 megohms, and input resistance 30 ohms, giving a resistance gain = 1.5 megohms ÷ 30 ohms = 50,000, which is higher than 27, isn't it.

Power gain = $(0.98)^2 \times 50{,}000 = 48{,}000 = 46.8$ db., about the same as c.e.

But in the 2SC32 medium power transistor being considered, the low frequency $\alpha_0 = 0.98$ (corresponding to $\beta = 50$). The output resistance is now 1500 ohms and input resistance only 4.5 ohms. This very considerable decrease compared with low power is mainly due to the higher collector current of this transistor. With really substantial transistors like the SE3030, collector and base resistances become microscopic, and it becomes quite difficult to draw from or deliver power to them; thereby hangs a long tale, which I shall explore in another article. Now,

Resistance gain = 1500 ÷ 4.5 = 335 at 10 Mc.

Power gain = $(0.9)^2 \times 335 = 270 = 24.3$ db. (see Fig. 3, dotted line, point E).

The resistance gain falls somewhat, to about 100 at f_T, at which point $f\alpha_B$ has come down to about 0.75, giving PG = 17.5 db. (point F); compare with 3 db. (point C) in common-emitter. At this point α begins to fall at 6 db./octave, and PG about twice that fast, so that at 600 Mc. there is a mere 6 db. or so of power gain (point G). Even so, that is quite a lot better than the performance of the same transistor in common-emitter, where at 600 Mc. it has melted into a heap of hot slag.

The performance of common-base is impressive, even if you have to reduce the frequency a bit to keep it stable. One can conclude only that common-emitter is still used so much because it looks so comfortingly like a valve. The input impedance of common-base (analogous to grounded grid) is indeed low, often less than 10 ohms. Although this is often mentioned as a problem in coupling to the driver, modern interstage coupling techniques use variations of series-resonant circuits (e.g. L or T networks, and series peaking inductance) to allow power transfer over very wide ranges of impedances, and using reasonable values of components. Details about this have appeared in the R.C.A. "Silicon Power Circuits Manual" and in the Amateur periodical literature during the past two years (for example, "Designing Interstage Networks," by R. L. Nelson, K6ZGQ, "Ham Radio," Oct. 1968, p. 59, except note errors in Eqns. 3a and 5—I can supply details—R.L.G.), to which in due course I shall add a bit either here or in "EEB".

Although common-base has been criticised for instability when it has been pushed too high in frequency, this is not necessary if you are not greedy. It is quite sufficient to get the 2SC32 operating efficiently at 2 metres. This saves money for a given power, and makes best use of material readily available; in the same power range is also the Fairchild 2N3642 or AY6102, or Motorola 2N3137 (or 2N697 at lower frequency). With really good overlay transistors,[8] truly remarkable performance could be expected from common-base at healthy frequencies: the R.C.A. 2N3375 or 2N3866; or Mullard BLY34, 2N3553 or 2N3375.

Instability problems can be attacked as for any other transistorised system: neutralisation, and a number of non-conventional garden recipes for taming transistor power amplifiers.[9]

All remaining commonsense aspects of frequency response behaviour of transistors have been discussed in the preceding articles on Computer Board Transistors ("A.R.," Aug., Sept. and Dec. 1969).

COMMON-BASE: A PRACTICAL EXAMPLE

The recent literature brings a good example of the use of common-base to obtain improved performance from

6. See "The Elusive H Parameter," C. Kleinert, WB6BIH, "73," Dec. 1968, p. 20. Also Handbooks by G.E. and Mullard. Also "Diodes and Transistors," G. Fontaine (Philips Tech. Library), chapter on "Transistor Parameters."

7. VK7LL reports that some p.a. amplification is possible at 2 metres with 2SC32.

8. "Selected Overlay Transistors," "EEB," Sept. 1967, July and Oct. 1968. Costs versus performance evaluated. The transistors mentioned here give high performance at relatively modest cost.

9. "Transistorised Transmitter Design, Part VII.," "EEB," Jan. 1969. R.C.A. "Silicon Power Circuits Manual," section "High Frequency Power Amplifiers". "Reference List for Transistor Transmitter Design," "EEB," April and May 1968. "Commonsense and Instabilities in Transistorised Transmitters," R.L.G., to appear soon in "Amateur Radio." By now you may well have gathered that I am an avid reader of "EEB". So are some 500 other people. Enquire: Box 177, Sandy Bay, Tasmania, 7005, Australia.

transistors,[10] and to break with valve tradition. In this case, 1w. output is obtained (from 2w. input, 18v.) at 144 Mc. from paralleled 2N2218 "Snowflake" (T.I.) or "Annular Star" (Motorola) transistors in common-base configuration. These are quite similar to the 2SC32s mentioned above, having only a bit higher power rating; most of the numbers described for the 2SC32 will apply to the 2N2218 (or to the Motorola 2N2218A with higher voltage rating).

Thus, Fig. 3 here, shows that the 2N2218 should provide about 19 db. of power gain in common-base at 2 metres compared to about 6 db. in common-emitter. In GW3DFF's transmitter, the necessary drive (about 13 mW. to the final p.a.) is generated by a conventional 2N1613 crystal oscillator, followed by three unconventional 2N2218 multiplier stages, **all in common-base.** Obviously most of this multiplicity of drivers is required for the frequency multiplication; 13 mW. is not difficult to obtain from a single transistor operated at fundamental frequency.

This transmitter is notable for its good design throughout, including current equalisation via separate bypassed emitter resistances for the paralleled p.a. transistors, L-coupling networks throughout (including output) to obtain efficient coupling to the low-Z loads yet with practical component values, and zener diodes shunting the modulation transformer to keep maximum voltage peaks down to the collector ratings of the final transistors (and driver, which is also modulated). The author states that it also works well as n.b.f.m. simply by using a BA107 varicap diode across the crystal in the oscillator.

A few comments are in order. The author states that "Although the power gain in common-base is less than in the more usual common-emitter configuration, stability is much improved and unwanted frequencies from the crystal oscillator and multiplier stages are not passed through to the final power amplifier so easily." Although the stability and isolation are certainly better than common-emitter at this frequency, the power gain at 2 metres is **not** less than that in common-emitter, as you can see from Fig. 3 here. The author is confused by the fact that the gain of common-base would be somewhat less at low frequencies, but this is certainly not true at 144 Mc., as illustrated by my previous discussion. At this frequency the common-base set-up produces excellent results where common-emitter would give mediocre performance even if operating under ideal conditions (neutralised, unilateralised, etc.).

Furthermore, it should be noted that the specification sheets state values for f_T and $f\alpha_B$ at modest currents, 10 mA. for the 2SC32, 20 mA. for the 2N2218. This will fall considerably at practical transmitter values of collector current (e.g. 100 mA.), making the comparison of common-base vs. common-emitter performance even more impressive at high operating frequencies. In addition, if a parallel-resonant output tuned circuit is used it will be easier to couple it to the higher collector impedance of common-base, although it is still necessary to run the collector to a tap if adequate Q is to be achieved, since collector output resistance will still be less than 1000 ohms at these power levels, even for common-base.

If, therefore, we must copy valve circuitry when using transistors, let us give more attention to the transistor-equivalent of grounded-grid, to obtain much better high frequency response from transistors of modest cost.

10. "A Two Metre Snowflake Transistor Transmitter," R. J. Barrett, GW3DFF, "Radio Communication," Feb. 1969, p. 105; "Amateur Radio," Nov. 1969, p. 10.

ACKNOWLEDGMENT

I wish to acknowledge the assistance and special insights provided by R. A. Reynolds, VK7ZAR, and numerous other individuals with whom I have discussed these matters, here and abroad.

REFERENCES

1. "Understanding Transistor Response Parameters," by R. Hejhal, Motorola Semiconductor Technical Information Sheet AN-139 (Cannon Electric, Aust.). Also now in Motorola Data Book.
2. "The Transistor Unity Gain Parameters," "Miniwatt Digest," March 1966, p. 90, more rigorous than I, but useful. Note that several other references are specified in the bibliographies of these two references.
3. "Diodes and Transistors," by G. Fontaine (Philips Technical Library, 1963).
4. "Selected Semiconductor Circuits Handbook," ed. by S. Schwartz (Wiley, 1961, but now available in inexpensive Services Edition, from larger bookshops).
5. "Transistor Circuit Design" (Texas Instruments Staff), ed. by J. A. Walstom and J. R. Miller (McGraw-Hill, 1963), p. 326.
7. Various Transistor Handbooks or Manuals (G.E., Motorola, R.C.A.), as convenient. Also Mullard Reference Manual of Transistor Circuits, and R.C.A. Silicon Power Circuits Manual.

☆

THE NATURE OF MATTER

(Continued from Page 10)

ATMOSPHERE

The complex gas which surrounds the earth. We call it air.

Biosphere.—This is the thin terrestrial layer where life exists.

Troposphere.—Air from sea-level to 6-7½ miles altitude.

Stratosphere.—Rarified air from 7½ miles to about 30 miles altitude.

Ionosphere.—This consists of a number of layers of ionised gas (mainly hydrogen) extending from about 25 miles to about 250 miles.

By means of Ionosphere Sounding Stations it has been found that the various layers in the ionosphere have different characteristics which effect the propagation or radiation of radio waves. The ionosphere plays a tremendously important role in broadcasting.

C Layer.—The lowest layer in the ionosphere is known as the C layer. It lies just above the stratosphere and is mainly ozone. Ultra-violet light from the sun penetrates the ionosphere to the ozone layer where most of it is blocked and relatively little gets through to the earth.

D Layer.—This layer lies above the C layer at about 30 miles, corresponding very nearly to the upper height of the ozone layer. Very low frequency radio waves, 10 KHz.-550 KHz., are reflected from this layer. However, the attenuation increases very rapidly with wavelength (i.e. the layer absorbs a lot of the radio frequency waves) and this is the reason that transmitters using these frequencies are of very high power. Also, this layer is **relatively** stable and this combines to allow very long distance communication to be maintained by such stations.

Fortunately, radio waves of shorter wavelength (higher frequency) penetrate this layer, and are reflected by other layers. Some radio waves manage to go right through the ionosphere as though there were windows in it. These radio waves are used for outer-space communications, transmissions via the moon and radio astronomy. In addition, light from the sun and stars gets through.

E Layer.—The height of this layer is about 10 km. It is known as the Kennelly-Heaviside layer. Fortunately for us, in medium frequency broadcasting, this layer reflects all radio waves in the band 550 to 1600 KHz., and represents a source of reception of broadcast programmes over distances of hundreds of miles at night.

During the daytime the E layer becomes very heavily ionised due to the action of the sun, so that most high angle broadcast waves are absorbed and reception is dependant on the ground wave. After dark a de-ionising process sets in and a state is soon reached where the critical number of ions exists for proper reflection of these medium waves.

F Layer.—This layer is at about 175 miles above the earth at night time. At this height the density of the air is so low that recombinations of ions and electrons does not take place quickly as the particles can travel relatively great distances before meeting.

The ionisation decreases after sundown and reaches a minimum just before sunrise. During daytime the F layer splits into two parts, known as the F1 and F2 layers. The average virtual heights are 140 and 200 miles. These layers are highly ionised about noon, but at sunset they merge into the single F layer.

The F layer reflects high frequency radio waves up to about 60 MHz. at the peak of the 11-year-solar-cycle.

These notes about the ionosphere are necessarily brief and conclude the lecture on The Nature of Matter.

Wireless Institute of Australia

Victorian Division

A.O.C.P. CLASS

commences

Theory:

TUESDAY, 17th FEB., '70

Morse:

THURSDAY, 19th FEB., '70

Theory is held on Tuesday evenings, and Morse and Regulations on Thursday evenings, 8 to 10 p.m.

Persons desirous of being enrolled should communicate with Secretary, W.I.A., Victorian Division, P.O. Box 36, East Melbourne, Vic., 3002. (Phone 41-3535, 10 a.m. to 3 p.m.)

ONE WAY

BRIAN J. WARMAN, VK5BI*

When the XYL decided I should take some long service leave for an extended trip Interstate, I was faced with the prospect of being off the air for a couple of months, or going mobile. Mobileering doesn't bother me normally as we are far away from other Amateurs in this part of Australia, and the only time we use the car is to get from point A to point B as rapidly as possible.

I was lucky enough to buy a Weston B.C.A. type transceiver through the Wireless Institute. This unit is normally crystal controlled on two channels which can be very close to the 40 and 80 metre bands. I decided the best band for my purpose was 40, so I converted the receiver oscillator from crystal control with a simple "tickler" type oscillator. It was possible to arrange enough bandspread so that a slow motion dial proved unnecessary. The mixer and r.f. sections were left fixed tuned.

The next step was to arrange for a b.f.o. so that I could copy s.s.b. for my regular sked with VK5VB. Transistors were an obvious choice here and I finished with a small sub-assembly on a bit of fibreboard built around a surplus transistor i.f. transformer. I originally took the supply for the b.f.o. from the 12v. low tension line, stabilised of course with a zener diode. I found, however, the b.f.o. was being modulated with vibrator hash. Finally, I put in a dropping resistor from the h.t. line, stabilised with a zener, and no problems.

The b.f.o. proved very sensitive to temperature variations. I probably could have improved things by selection of a different transistor type, but there just wasn't time. I understand absolute b.f.o. stability is a bit difficult to achieve with transistor circuits. I also added a r.f.-i.f. gain control to assist copy on strong s.s.b. signals and this completed the transceiver mods. No product detector was used.

I gave a lot of thought to the type of antenna to be employed. I finished up using a centre loaded whip for the following reasons.

Time.—I had heard helicals take a lot of time to prune and get up to peak efficiency, and I have had a lot of experience with loaded whips in other fields.

Mounting.—From listening on the air, I concluded the best place for a helical would be in the centre of the car top and I wasn't about to instal a pack rack or drill a hole in the top of my car, no sir, not this boy!

The photograph shows what I did. I made up a mounting from a piece of P.V.C. 1½" irrigation pipe, 15 " long. At each end I poured epoxy resin, thus fastening the socket for the whip mounting at the top and the steel piece for fastening to the car bumper at the other. The diagram shows the steel pipe the whip slides into, and also the finger which ensures good electrical connection from the feeder to the whip.

The whip proper is almost 12 feet long overall. The loading coil at the centre has a winding of stranded P.V.C. hookup wire 2" diameter and of 3" winding length. I will not give details of the coil construction as my coil was made from material available. If I was making it again, I'd probably mould one from epoxy resin. The reason I used the stranded hookup wire was I didn't have any large diameter copper wire.

Tuning was simple. I loaded the transmitter for maximum output at the rig and then using a field strength meter I tapped up the coil by pushing a pin into the windings until I got maximum indication on the field strength meter. The actual tap is very critical, and on my coil a movement of even an inch around a turn made a significant change.

The next whip I make will be shorter and I'll compensate for this by adding more turns on the coil. We collected tramway wires in VK3, and low bridges in VK2, and a lot of funny stares in VK4, if you know what I mean.

At this stage, I had plenty of r.f. coming out of the transmitter and could pick up plenty of signals until I started the engine. My Australia's own was S9. Diving under the bonnet, I remembered the mechanic's cure for all engine ills—remove the carbon spark plug leads. Personally I have never had any trouble with these. I guess they age in time, but I think heavy-handed mechanics who grab the lead to pull it off a plug rather than pull it off at the actual spark plug cap might be the main reason for failure. This would stretch the outside of the lead and leave a failure in the carbon track. That's my theory anyway. I put the leads back on, noticed an immediate improvement in the noise problem, and no difference to the car's performance.

I still had noise. I thought it was from the low tension side of the points and tried condensers on the ignition side of the coil without success. Finally an inspiration born from despair prompted me to dive under the car and short out the exhaust pipe to the underframe. The noise stopped dramatically. I bonded the exhaust to the body just forward of the front muffler with a piece of heavy braid and could then work mobile.

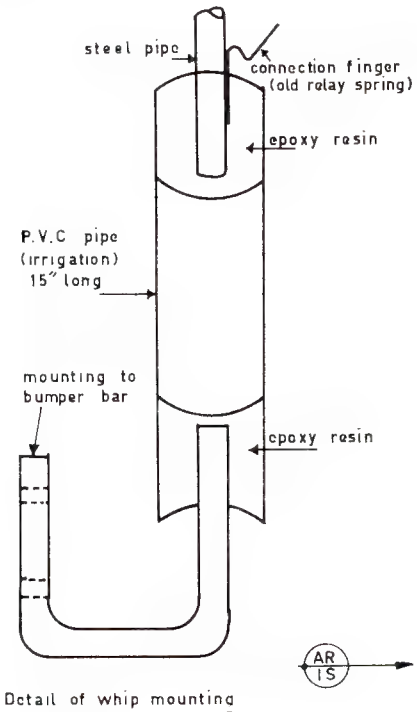

Detail of whip mounting

I must recommend anyone contemplating an extended trip to instal a simple mobile. Driving for long periods it gives one a real boost to be able to switch off the juvenile rubbish one gets on the broadcast band. It was handy more than once to get directions in a strange location from a local, and several times a break-in station asked us in for an eyeball. I hope I've proved there is no mystery to putting one in your car.

* Cowell, South Australia, 5602.

A.R.R.L. INTERNATIONAL DX COMPETITION

PRECIS OF RULES

Dates: Phone 7th/8th Feb., 7th/8th March. C.W. 21st/22nd Feb., 21st/22nd March, commencing at 0001 GMT Saturday and finishing 2400 GMT Sunday in each case.

Object: DX stations to contact as many of the 48 mainland United States and Canadian Call Areas as possible. Repeat contacts are permitted on additional bands.

Contact Exchange: DX to send RS(T) and d.c. input power. The W/VE station will transmit RS(T) and his State or Province.

Points: Each complete QSO, 3 points; each incomplete QSO, 2 points.

Multiplier: On each band, the 48 states plus VO and VE1 to VE8 (total 57). Final multiplier is the sum of multipliers worked on each band and QSO points times the final multiplier equals the claimed score.

Logs containing dates, times in GMT, band, exchanges and points to A.R.R.L. marked "A.R.R.L. International DX Competion", 225 Main Street, Newington, Conn., U.S.A., 06111, to arrive no later than 27th April, 1970.

— • • • —

B.A.R.T.G. SPRING R.T.T.Y. CONTEST

When: 0200 GMT, Saturday, 21st March, until 0200 GMT, Monday, 23rd March, 1970. The total contest period is 48 hours, but not more than 36 hours of operation is permitted. Times spent in listening periods count as operating time. The 12-hour non-operating period can be taken at any time during the contest, but off-periods may not be less than two hours at a time. Times on and off the air must be summarised on the log and score sheets.

Bands: 3.5, 7, 14, 21 and 28 MHz. Amateur bands.

Stations may not be contacted more than once on any one band, but additional contacts may be made with the same station if a different band is used.

Country Status: A.R.R.L. Countries List, except KL7, KH6 and VO to be considered as separate countries.

Messages exchanged will consist of: (a) time GMT, (b) message number and RST.

Points: (a) All two-way r.t.t.y. contacts with stations within one's own country will earn **two** points.

(b) All two-way r.t.t.y. contacts with stations outside one's own country will earn **ten** points.

(c) All stations will receive a bonus of **200** points per country worked including their own. **Note:** Any one country may be counted again if worked on another band, but continents are counted once only.

Scoring: (a) Two-way exchange points times total countries worked.

(b) Total country points times number of continents worked.

(c) Add (a) and (b) together to obtain your final score.

Sample score: (a) exchange points (302) multiplied by countries (10), equal 3,020; (b) country points (2,000) multiplied by continents (3), equal 6,000; (c) (a) and (b) added to give a score of 9,020.

Logs and Score Sheets: Use one log for each band and indicate any rest periods. Logs to contain: band, time GMT, message and RST numbers sent and received and exchange points claimed. All logs must be received by **25th May, 1970**, to qualify.

Awards: Certificates will be awarded to the two top scorers in each country. The final positions in the results table will be valid for entry in the "World Champion of R.t.t.y." Championship.

The judges decision will be final and no correspondence can be entered into in respect of incorrect or late entries.

Send your contest logs to Ted Double, G8CDW, B.A.R.T.G. Contest Manager, 33B Windmill Hill, Enfield, Middlesex, England.

Technical Correspondence

PLATING OF COILS

Editor "A.R.," Dear Sir,

I have read with interest the article on the plating of coils, written by R. G. Stone, VK5PB, and can readily appreciate the need (page 13, "A.R." Nov. 1969) to produce a mirror finish on the wire of the coil, since irregularities of only a few microns represent serious discontinuity in the "skin" in which the r.f. current flows.

However, mechanical polishing, i.e. buffing, can leave a residue of deformation in the surface of the wire below the mirror finish so produced and this would have an undesirable effect on the conductivity of the skin. This does not ignore the effect of deformation as a whole, caused during the winding of the coil—but of course, the current flows in the skin, which need not be further deformed if electrolytic or chemical polishing be used.

The solutions and methods used to polish copper are well known and published in the book "The Electrolytic and Chemical Polishing of Metals in Research and Industry," Tegart, W. J. McG., Pergamon Press, London, 1956, and elsewhere, but anyone interested, who has no access to this information, could contact me.

—T. W. Barnes, VK2ABI.

PREDICTION CHARTS FOR JANUARY 1970

(Prediction Charts by courtesy of Ionospheric Prediction Service)

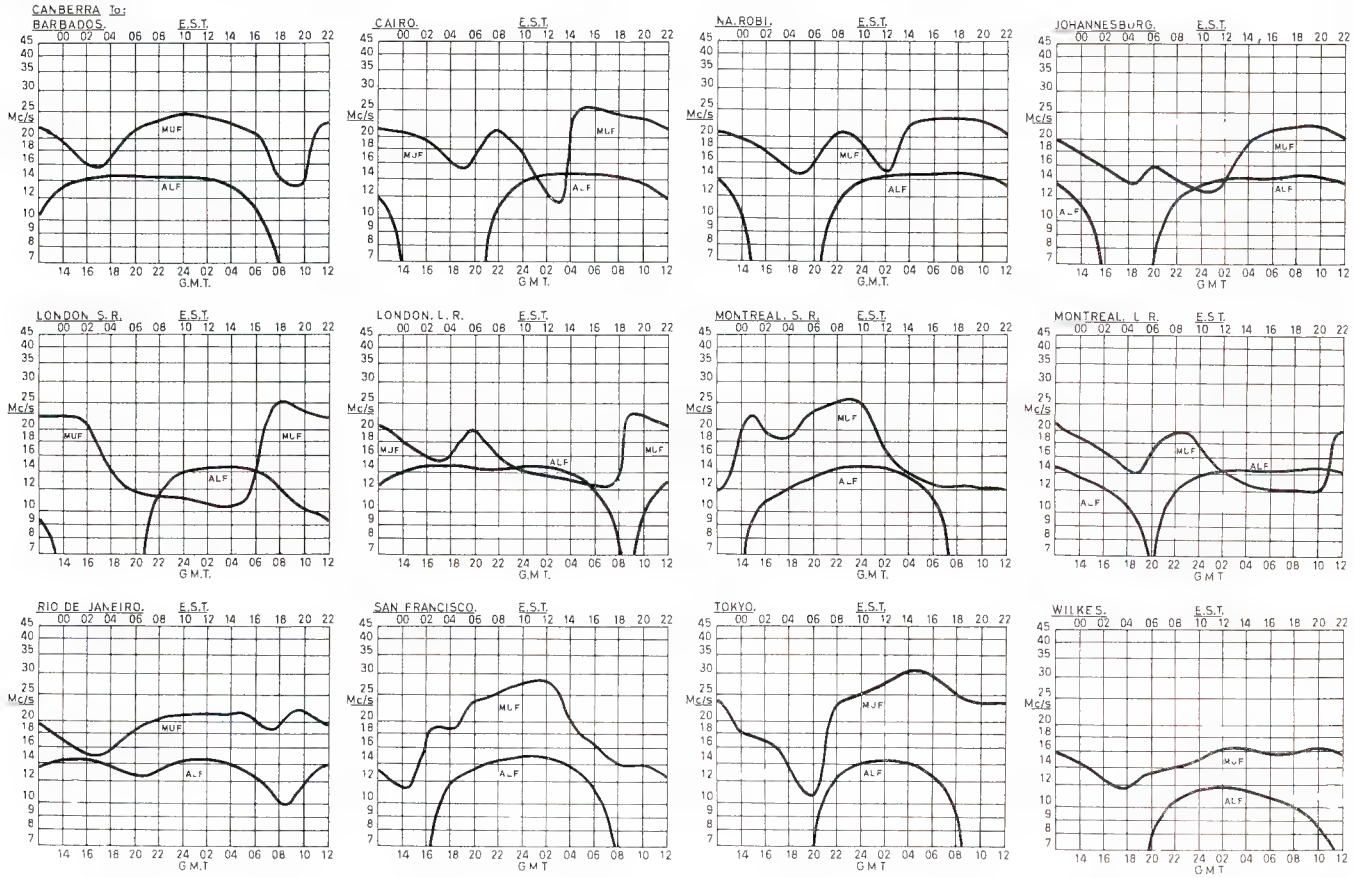

AUSTRALIAN DX CENTURY CLUB AWARD

OBJECTS

1.1 This Award was created in order to stimulate interest in working DX in Australia and to give successful applicants some tangible recognition of their achievements.

1.2 This Award, to be known as the "DX Century Club" Award, will be issued to any Australian Amateur who satisfies the following conditions.

1.3 A certificate of the Award will be issued to the applicants who show proof of having contacted one hundred countries, and will be endorsed as necessary, for contacts made using only one type of emission.

REQUIREMENTS

2.1 Verifications are required from one hundred different countries as shown in the Official Countries List.

2.2 The Official Countries List will be published annually in "Amateur Radio" and will be amended from time to time as required. Should a country be deleted from the Countries List at any time, members and intending members will be credited with such country if the date of contact was before such deletion.

2.3 The commencing date for the Award is 1st January 1946. All contacts made on or after this date may be included.

OPERATION

3.1 Contacts must be made in the H.F. Band (Band 7) which extends from 3 to 30 Mc., but such contacts must only be made in the authorised Amateur Bands in Band 7

3.2 All contacts must be two-way contacts on the same band. Cross band contacts will not be allowed.

3.3 Contacts may be made using any authorised type of emission for the band concerned.

3.4 Credit may only be claimed for contacts with stations using regularly-assigned Government call signs for the country concerned.

3.5 Contacts made with ship or aircraft stations will not be allowed, but land-mobile stations may be claimed provided their specific location at the time of contact is clearly shown on the vertification.

3.6 All stations must be contacted from the same call area by the applicant (except as below), although if the applicant's call sign is subsequently changed, contacts will be allowed under the new call sign providing the applicant is still in the same call area.

If the applicant moves to another call area, contacts must be made from within a radius of 150 miles of the previous location to qualify for award purposes. If the distance of the new location from the old exceeds a radius of 150 miles, a separate application for a new award must be made claiming only contacts made from the new location.

3.7 All contacts must be made when operating in accordance with the Regulations laid down in the "Handbook for the Guidance of Operators of Amateur Wireless Stations" or its successor.

VERIFICATIONS

4.1 It will be necessary for the applicant to produce verifications in the form of QSL cards or other written evidence showing that two-way contacts have taken place.

4.2 Each verification submitted must be exactly as received from the station contacted, and altered or forged verifications will be grounds for disqualification of the applicant.

4.3 Each verification submitted must show the date and time of contact, type of emission and frequency band used, the report and the location or address of the station at the time of contact.

4.4 A check list must accompany every application setting out the details for each claimed station in accordance with the details required in Rule 4.3.

APPLICATIONS

5.1 Applications for membership shall be addressed to the **Federal Awards Manager, W.I.A., P.O. Box 67, East Melbourne, Vic., 3002**, accompanied by the verifications and check list with sufficient postage enclosed for their return to the applicant, registration being included if desired.

5.2 A nominal charge of 25c, which shall also be forwarded with the application, will be made for the issue of the certificate to successful applicants who are non-members of the Wireless Institute of Australia.

5.3 Successful applicants will be listed periodically in "Amateur Radio". Members of the D.X.C.C. wishing to have their verified country totals, over and above the one hundred necessary for membership, listed will notify these totals to the Federal Awards Manager.

5.4 In all cases of dispute, the decision of the Federal Awards Manager and two officers of the Federal Executive of the W.I.A. in the interpretation and application of these Rules shall be final and binding.

5.5 Notwithstanding anything to the contrary in these Rules, the Federal Council of the W.I.A. reserves the right to amend them when necessary.

AUSTRALIAN V.H.F. CENTURY CLUB AWARD

OBJECTS

1.1 This Award has been created in order to stimulate interest in the V.H.F. bands in Australia, and to give successful applicants some tangible recognition of their achievements.

1.2 This Award, to be known as the "V.H.F. Century Club" Award, will be issued to any Australian Amateur who satisfies the following conditions.

1.3 Certificates of the Award will be issued to the applicants who show proof of having made one hundred contacts on the V.H.F. bands, and will be endorsed as necessary, for contacts made using only one type of emission.

REQUIREMENTS

2.1 Contacts must be made in the V.H.F. Band (Band 8) which extends from 30 to 300 Mc., but such contacts must only be made in the authorised Amateur Bands in Band 8.

2.2 In the case of the authorised bands between 30 and 100 Mc., verifications are required from one hundred different stations at least seventy of which must be Australian. The Amateur Bands 50 to 54 Mc. and 56 to 60 Mc. will be counted as one band for the purposes of the Award.

2.3 In the case of the authorised Amateur Band between 100 to 200 Mc., verifications from one hundred different stations are required.

2.4 It is possible under these rules for one applicant to receive two certificates, one for each of the authorised Amateur Bands nominated in Rules 2.2 and 2.3.

2.5 The commencing date for the Award is 1st June, 1948. All contacts made on or after this date may be included.

OPERATION

3.1 All contacts must be two-way contacts on the same band, and cross band contacts will not be allowed.

3.2 Contacts may be made using any authorised type of emission for the band concerned.

3.3 Fixed stations may contact portable/mobile stations and vice versa, but portable/mobile station applicants must make their contacts from within the same call area.

3.4 Applicants, when operating either portable/mobile or fixed, may contact the same station licensee, but may not include both contacts for the same type of endorsement.

3.5 Applicants may only count one contact for a station worked as a limited licensee with a Z call sign who is subsequently contacted as a full A.O.C.P. holder.

3.6 All stations must be contacted from the same call area by the applicant (except as below), although if the applicant's call sign is subsequently changed, contacts will be allowed under the new call sign providing the applicant is still in the same call area.

If the applicant moves to another call area, contacts must be made from within a radius of 150 miles of the previous location to qualify for award purposes. If the distance of the new location from the old exceeds a radius of 150 miles, a separate application for a new award must be made claiming only contacts made from the new location.

3.7 All contacts must be made when operating in accordance with the Regulations laid down in the "Handbook for the Guidance of Operators of Amateur Wireless Stations" or its successor.

VERIFICATIONS

4.1 It will be necessary for the applicant to produce verifications in the form of QSL cards or other written evidence showing that two-way contacts have taken place.

4.2 Each verification submitted must be exactly as received from the station contacted, and altered or forged verifications will be grounds for disqualification of the applicant.

4.3 Each verification submitted must show the date and time of contact, type of emission and frequency band used, the report and the location or address of the station at the time of contact.

4.4 A check list must accompany every application setting out the following details:—

4.4.1 Applicant's name and call sign, and whether a member of the W.I.A. or not.

4.4.2 Band for which application is made, and whether special endorsement is involved.

4.4.3 Where applicable, the date of change of call sign and previous call sign.

4.4.4 Details of each contact as required by Rule 4.3.

4.4.5 The applicant's location at the time of each contact if portable/mobile operation is involved.

4.4.6 Any relevant details of any contact about which some doubt might exist.

APPLICATIONS

5.1 Applications for membership shall be addressed to the **Federal Awards Manager, W.I.A., P.O. Box 67, East Melbourne, Vic., 3002**, accompanied by the verifications and check list with sufficient postage enclosed for their return to the applicant, registration being included if desired.

5.2 A nominal charge of 25c, which shall also be forwarded with the application, will be made for the issue of the certificate to successful applicants who are non-members of the Wireless Institute of Australia.

5.3 Successful applicants will be listed periodically in "Amateur Radio". Members of the V.H.F.C.C. wishing to have their verified totals, over and above the one hundred necessary for membership, listed will notify these totals to the Federal Awards Manager.

5.4 In all cases of dispute, the decision of the Federal Awards Manager and two officers of the Federal Executive of the W.I.A. in the interpretation and application of these Rules shall be final and binding.

5.5 Notwithstanding anything to the contrary in these Rules, the Federal Council of the W.I.A. reserves the right to amend them when necessary.

AUSTRALIAN D.X.C.C. COUNTRIES LIST

	Phone	C.W.
A2, ZS9—Botswana		
AC1, 2, 5-0—Bhutan		
AC3—Sikkim		
AC4—Tibet		
AP—East Pakistan		
AP—West Pakistan		
BV—Taiwan		
BY—China		
C2, VK9—Nauru		
C3, PX—Andorra		
CE—Chile		
CE9AA-AM, FB8Y, KC4AA-US, LA, LU-Z, OR4, UA1, VK0, AX0, VP8, ZL5, ZM5, 8J—Antarctica		
CE0A—Easter Is.		
CE0X—San Felix		
CE0Z—Juan Fernandez		
CM, CO—Cuba		
CN2, 8, 9—Morocco		
CP—Bolivia		
CR3, 5—Portuguese Guinea		
CR4—Cape Verde Is.		
CR5—Principe, Sao Thome		
CR6—Angola		
CR7—Mozambique		
CR8, 10—Portuguese Timor		
CR9—Macao		
CT1—Portugal		
CT2—Azores		
CT3—Madeira Is.		
CX—Uruguay		
DJ, DK, DL, DM—Germany		
DU, DX—Philippine Is.		
EA—Spain		
EA6—Balearic Is.		
EA8—Canary Is.		
EA9—Rio de Oro		
EA9—Spanish Morocco		
EA0—Spanish Guinea		
EI—Republic of Ireland		
EL, 5L—Liberia		
EP—Iran		
ET3, 9E, 9F—Ethiopia		
F—France		
FB8W—Crozet Is.		
FB8X—Kerguelen Is.		
FB8Z—Amsterdam and St. Paul Is.		
FC—Corsica		
FG7—Guadeloupe		
FH8, FB8—Comoro Is.		
FK8—New Caledonia		
FL8—French Somaliland		
FM7—Martinique		
FO8—Clipperton Is.		
FO8—French Oceania		
FO8M—Maria Theresa		
FP8—St. Pierre and Miquelon		
FR7—Glorioso Is. (from 25/6/60)		
FR7—Juan de Nova (from 25/6/60)		

	Phone	C.W.
FR7—Reunion Is.		
FR7—Tromelin		
FS7—Saint Martin		
FW8—Wallis and Futuna Is.		
FY7—French Guiana and Inini		
G, GB—England		
GC—Guernsey and Dependencies		
GC—Jersey Is.		
GD—Isle of Man		
GI—Northern Ireland		
GM—Scotland		
GW—Wales		
HA, HG—Hungary		
HB—Switzerland		
HB0, HE—Liechtenstein		
HC—Ecuador		
HC8—Galapagos Is.		
HH—Haiti		
HI—Dominican Republic		
HK—Columbia		
HK0—Bajo Nuevo		
HK0—Malpelo Is.		
HK0—San Andres and Providencia		
HL, HM—Korea		
HP—Panama		
HR, HQ—Honduras		
HS—Thailand		
HV—Vatican		
HZ, 7Z—Saudi Arabia		
I, IT—Italy		
IS1—Sardinia		
JA, JH, JR, KA—Japan		
JD1, KA1, KG6I—Bonin and Volcano Is.		
JD1, KA1, KG6I—Marcus Is.		
JT—Mongolia		
JW, LA/P—Svalbard		
JX, LA/P—Jan Mayen		
JY—Jordan		
K, KN, W, WA, WB ,WN—United States of America		
KB6—Baker, Howland and American Phoenix Is.		
KC4—Navassa Is.		
KC6—Eastern Caroline Is.		
KC6—Western Caroline Is.		
KG4—Guantanamo Bay		
KG6—Guam		
KG6R, S, T—Mariana Is.		
KH6, WH6—Hawaiian Is.		
KH6—Kure Is.		
KJ6—Johnston Is.		
KL7, WL7—Alaska		
KM6—Midway Is.		
KP4, WP4—Puerto Rico		
KP6—Palmyra Group, Jarvis Is.		
KR6, 8—Ryuku Is.		
KS4—Swan Is.		
KS4B, HK0—Serrana Bank and Roncador Cay		

	Phone	C.W.
KS6—American Samoa		
KV4, WV4—Virgin Is.		
KW6—Wake Is.		
KX6—Marshall Is.		
KZ5—Canal Zone		
LA, LJ—Norway		
LU—Argentina		
LX—Luxembourg		
LZ—Bulgaria		
MP4B—Bahrein		
MP4D, T—Trucial Oman		
MP4M, VS9O—Sultinate of Muscat and Oman		
MP4Q—Qatar		
OA—Peru		
OD5—Lebanon		
OE—Austria		
OH, OF—Finland		
OH0—Aland Is.		
OK, OL, OM—Czechoslovakia		
ON—Belgium		
OX, KG1, XP—Greenland		
OY—Faroe Is.		
OZ—Denmark		
PA, PE, PI—Netherlands		
PJ—Netherlands Antilles		
PJ—Sint Maarten		
PY, PQ, PR, PS, PT, PU—Brazil		
PY0—Fernando de Noronha		
PY0—St. Peter and St. Paul's Rocks		
PY0—Trinidade and Martim Vaz Is.		
PZ1—Surinam		
SK, SL, SM—Sweden		
SP, 3Z—Poland		
ST2—Sudan		
SU—Egypt		
SV—Crete		
SV—Dodecanese		
SV—Greece		
TA—Turkey		
TF—Iceland		
TG—Guatemala		
TI—Costa Rica		
TI9—Cocos Is.		
TJ, FE8—Cameroun		
TL—Central African Republic (from 13/8/60)		
TN—Congo Republic (from 15/8/60)		
TR—Gabon Republic (from 17/8/60)		
TT—Chad Republic (from 11/8/60)		
TU—Ivory Coast (from 7/8/60)		
TY—Dahomey Republic (from 1/8/60)		
TZ—Mali Republic (from 20/6/60)		
UA, UV, UW1-6, UN1—European Russian S.F.S.R.		
UA, UV, UW9, 0, UZ0—Asiatic R.S.F.S.R.		
UA1—Franz Josef Land		
UA2—Kaliningradsk		
UB5, UT5, UY5—Ukraine		
UC2—White Russian S.S.R.		
UD6—Azerbaijan		
UF6—Georgia		
UG6—Armenia		

	Phone	C.W.
UH8—Turkoman		
UI8—Uzbek		
UJ8—Tadzhik		
UL7—Kazakh		
UM8—Kirghiz		
UO5—Moldavia		
UP2—Lithuania		
UQ2—Latvia		
UR2—Estonia		
VE, VO, 3B, 3C—Canada		
VK, AX—Australia		
VK2, AX2—Lord Howe Is.		
VK4, AX4—Willis Is.		
VK9, AX9, ZC3—Christmas Is.		
VK9, AX9—Cocos Is.		
VK9, AX9—Norfolk Is.		
VK9, AX9—Papua Territory		
VK9, AX9—Territory of New Guinea		
VK0, AX0—Heard Is.		
VK0, AX0—Macquarie Is.		
VP1—British Honduras		
VP2A—Antigua, Barbuda		
VP2D—Dominica		
VP2G—Grenada and Dependencies		
VP2K—Anguilla		
VP2K—St. Kitts, Nevis		
VP2L—St. Lucia		
VP2M—Montserrat		
VP2S—St. Vincent and Dependencies		
VP2V—British Virgin Is.		
VP5—Turks and Caicos Is.		
VP7—Bahama Is.		
VP8—Falkland Is.		
VP8, LU-Z—South Georgia Is.		
VP8, LU-Z—South Orkney Is.		
VP8, LU-Z—South Sandwich Is.		
VP8, LU-Z, CE9AN-AZ—South Shetland Is.		
VP9—Bermuda Is.		
VQ1—Zanzibar		
VQ8—Agalega and St. Brandon		
VQ8—Mauritius		
VQ8—Rodriguez		
VQ9—Aldabra		
VQ9—Chagos Is.		
VQ9—Desroches		
VQ9—Farquahar		
VQ9—Seychelles		
VR1—British Phoenix Is.		
VR1—Gilbert, Ellice and Ocean Is.		
VR2—Fiji Is.		
VR3—Fanning and Christmas Is.		
VR4—Solomon Is.		
VR5—Tonga Is.		
VR6—Pitcairn Is.		
VS5—Brunei		
VS6—Hong Kong		
VS9A, P, S—Aden and Socotra		
VS9K—Kamaran Is.		
VU—India		
VU4—Laccadive Is.		
VU5—Andaman and Nicobar Is.		
XE, XF, 4A—Mexico		

	Phone	C.W.
XF4—Revilla Gigedo		
XT—Voltaic Republic (from 6/8/60)		
XU—Cambodia		
XW8—Laos		
XZ2—Burma		
YA—Afghanistan		
YB, YC, YD, PK, 8F—Indonesia (from 1/5/63)		
YI—Iraq		
YJ, FU8—New Hebrides		
YK—Syria		
YN, YN0—Nicaragua		
YO—Rumania		
YS, HU—Salvador		
YU—Yugoslavia		
YV, 4M—Venezuela		
YV0—Aves Is.		
ZA—Albania		
ZB2—Gibraltar		
ZD3—The Gambia		
ZD5, ZS7—Swaziland		
ZD7—St. Helena		
ZD8—Ascension Is.		
ZD9—Tristan da Cunha & Gough Is.		
ZE—Rhodesia		
ZF1, VP5—Cayman Is.		
ZK1—Cook Is.		
ZK1—Manahiki Is.		
ZK2—Niue		
ZL, ZM—New Zealand		
ZL, ZM/A—Auckland and Campbell Is.		
ZL, ZM/C—Chatham Is.		
ZL, ZM/K—Kermadec Is.		
ZM7—Tokelaus		
ZP—Paraguay		
ZS1, 2, 4, 5, 6—South Africa		
ZS2—Prince Edward and Marion Is.		
ZS3—South-West Africa		
1M—Minerva Reefs		
1S—Spratly Is.		
3A—Monaco		
3V8—Tunisia		
3W8, XV5—Vietnam		
3X, 7G—Republic of Guinea		
3Y, LA/G—Bouvet Is.		
4S7—Ceylon		
4U—I.T.U. Headquarters, Geneva		
4W—Yemen		
4X, 4Z—Israel		
5A—Libya		
5B4, ZC4—Cyprus		
5H3, VQ3—Tanzania		
5N2, ZD2—Nigeria		
5R8, FB8—Malagasy Republic		
5T—Mauritania (from 20/6/60)		
5U7—Niger Republic (from 3/8/60)		
5V—Togo Republic		
5W1, ZM6—Samoa		
5X5, VQ5—Uganda		
5Z4, VQ4—Kenya		
6O1, 2, 6—Somali Republic		
6W8, FF8—Senegal Rep. (from 20/6/60)		
6Y5, VP5—Jamaica		
7P8, ZS8—Lesotho		

	Phone	C.W.
7Q7, ZD6—Malawi		
7X, FA—Algeria		
8P, VP6—Barbados		
8Q, VS9M—Maldive Is.		
8R, VP3—Guyana		
8Z4—Saudi Arabia/Iraq Neutral Zone		
9A1, M1—Republic of San Marino		
9G1, ZD4—Ghana (from 5/3/57)		
9H1, ZB1—Malta		
9J, VQ2—Zambia		
9K2—Kuwait		
9K3, 8Z5—Kuwait/Saudi Arabia Neutral Zone		
9L1, ZD1—Sierra Leone		
9M2, 4—Western Malaysia (fr. 16/9/63)		
9M6, 8—Eastern Malaysia (fr. 16/9/63)		
9N1—Nepal		
9Q5, OQ5, 0—Republic of the Congo		
9U5—Burundi (from 1/7/62)		
9V1, 0, VS1, 9M4—Singapore (prior to 16/9/63 or after 8/8/65 only. From 16/9/63 to 8/8/65 Singapore counts as 9M2—West Malaysia)		
9X5—Rwanda (from 1/7/62)		
9Y4, VP4—Trinidad and Tobago		
*—Blenheim Reef		
*—Geyser Reef		

* Since there is no apparent claim by any country to these reefs, no prefix will be shown. Confirmations for contact only after 4/5/67 will be accepted for D.X.C.C. credit.

DELETED COUNTRIES LIST

	Phone	C.W.
C9—Manchuria (prior 16/9/63)		
CN2—Tangier (prior 1/7/60)		
CR8—Damao, Diu (prior 1/1/62)		
CR8—Goa (prior 1/1/62)		
EA9—Ifni (prior 13/5/69)		
ET2—Eritrea (prior 15/11/62)		
FF8—French West Africa (pr. 7/8/60)		
FI8—French Indo China (pr. 21/12/50)		
FN—French India (prior 1/11/54)		
FQ8—French Equ. Africa (pr. 17/8/60)		
I1—Trieste (prior 1/4/57)		
I5—Italian Somaliland (prior 1/7/60)		
JZ0—Nether. New Guinea (pr. 1/5/63)		
PK1, 2, 3—Java (prior 1/5/63)		
PK4—Sumatra (prior 1/5/63)		
PK5—Netherlands Borneo (pr. 1/5/63)		
PK6—Celebes & Moluc. Is. (pr. 1/5/63)		
UN1—Karelo-Finnish Rep. (pr. 1/7/60)		
VO—Newfoundland (prior 1/4/49)		
VQ6—Brit. Somaliland (prior 1/7/60)		
VS4—Sarawak (prior 16/9/63)		
VS9H—Kuria Muria Is. (pr. 29/11/67)		
ZC5—Brit. North Borneo (pr. 16/9/63)		
ZC6—Palestine (prior 2/7/68)		
ZD4—Gold Coast, Togol'd (pr. 6/3/57)		
9M2—Malaya (prior 16/9/63)		
9S4—Saar (prior 1/4/57)		
9U5—Ruanda-Urundi (between 1/7/60 and 1/7/62 only)		

1296 Mc. Solid State Converter

H. N. SANDFORD, VK4ZT*

The Converter described was used to establish the 138-mile Australian record contact with VK4KE. From the onset of the project it was decided to develop a solid state LO chain in order to gain experience with transistors in the u.h.f. range. The improved frequency stability obtained would allow narrow-band operation with a consequent reduction in transmitter power output. To achieve any distance on low power, portable operation from 12 volts would be necessary.

IN the past, the tendency to build units like a battleship stemmed mainly from having access to a well equipped workshop. As I now use what is probably a typical "Ham" workshop consisting of a vice and a few hand tools, I was forced to modify construction methods accordingly. The majority of projects are now built using 26 gauge tinplate. It is easy to work, solders well with a 25-watt soldering iron and most important of all, provides excellent r.f. screening. Providing care is taken with the mechanical design, this light gauge metal provides adequate mechanical stability. This metal is available at reasonable prices in most cities, stocked for use at Technical Colleges.

DESCRIPTION

The mixer employs an s.h.f. diode in a trough line which feeds into a FET low noise i.f. pre-amplifier using an MPF107. The local oscillator chain uses five Fairchild AY1119 transistors. An i.f. of 28.5 Mc. was chosen, allowing 0.5 Mc. below 1296 Mc. with a standard 28-30 Mc. band. The third overtone crystal oscillator Q1 operates on a frequency of 52.8215 using a Pye crystal. Q2, Q3 and Q4 are doublers operating on the respective frequencies of 105.625, 211,25 and 422.5 Mc. Common base configuration was chosen as this provides a convenient layout with the minimum number of components per stage.

My choice of Fairchild AY1119 transistors from the overwhelming number of types available was dictated mainly by cost (50 cents, including tax, direct from manufacturer). I use this cheap NPN transistor for most i.f. and r.f. applications where noise figure is not important. It has an F_T of around 450 Mc. and will produce 20-30 milliwatts of r.f. output in the low v.h.f. range. The AY1114 is a direct PNP substitute and may be used without change when a positive earth is desired. Another important factor, especially for country Amateurs, is the prompt and efficient service provided by Fairchilds, a feature sadly lacking with many suppliers.

Q5 triples to 1267.5 Mc., providing up to 1 mA. mixer diode current. It was originally intended to use the more common but less efficient diode multiplier but, fortunately, I did not have a suitable diode such as the 1N82 on hand. As there appeared to be plenty of output from Q4 on 422.5 Mc., it seemed possible that an AY1119 would provide sufficient output as a tripler. Success was immediate and so simple it took me some time to convince myself the output was on the correct frequency.

The total collector lead length of one inch is approximately resonant at 1267.5 Mc. to provide maximum drive to the LO trough-line. The trough-line portion of the converter is similar to that described in the A.R.R.L. V.h.f. Handbook and originally appeared in March "QST" 1961.

The LO injection is coupled to the diode together with the signal to produce the desired i.f. output on 28.5 Mc. A neutralised Motorola MPF107 JFET is used in the i.f. pre-amplifier to provide the lowest possible noise figure. An MPF102 could be used for this stage, but is more difficult to neutralise due to the higher feedback capacity and may not produce as good a noise figure as the MPF107.

As this type of diode mixer has a considerable conversion loss, the noise figure of the i.f. pre-amplifier contributes directly to the overall noise figure of the converter. If a 14 Mc. i.f. is chosen, then the MPF102 would probably be suitable, but some degradation of overall noise figure may result due to the poor image rejection.

CONSTRUCTION

The general layout and dimensions are given in Figures 2 through 6.

Some variation may be required to use components on hand and should not be a problem as long as all leads are kept as short as possible. The LO chain was constructed separately and then soldered to the main chassis after adjustment. This was convenient for the prototype but the chassis could be constructed from one piece, if desired, with suitable partitions. It was originally intended to construct the i.f. amplifier in the compartment at the end of the mixer diode, but this would have rendered the diode inaccessible so the pre-amplifier was constructed in a separate box and screwed to the top of the converter with small ¼" x No. 2 P.K. screws.

2 B.A. or No. 10 N.F. countersunk or cheesehead screws are used for tun-

* 18 Loch Street, Toowoomba, Qld., 4350.

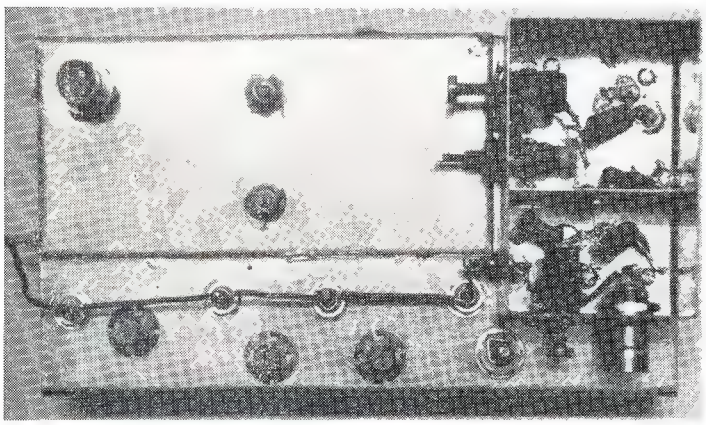

Top view with 28 Mc. i.f. pre-amplifier cover removed. Note no external connection to 12 volt supply line which is fed via i.f. co-axial cable.

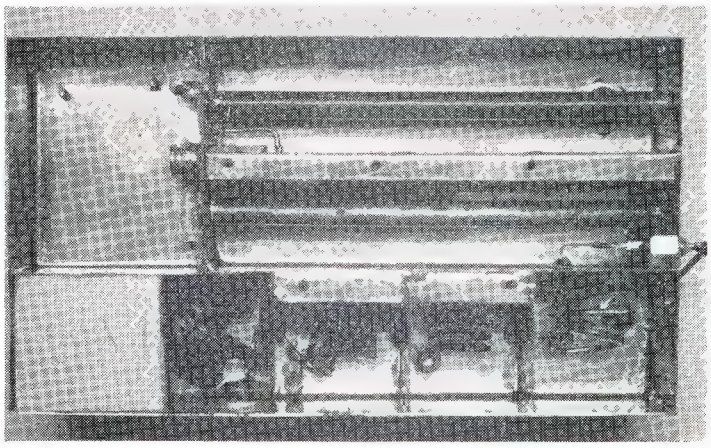

Bottom view: Crystal mounted in foam polystyrene at lower left. The collector coupling loop and mounting of Q5 in the trough-line wall is visible.

ing screws at the centre of each trough-line. This size provides a fine thread for tuning with a large diameter that reduces wobble. A nut is soldered to the top of the chassis using a spare screw. The end of the screw to be used can be slotted before threading into position.

Both half-wave lines of ¼" o.d. copper tubing are soldered centrally in the trough-lines after the tuning screws have been fitted. The signal input loop of 18 gauge wire is soldered to the connector, threaded through the mounting hole, out through a small clearance hole in the end plate, and then soldered into position after the connector is tightened.

The mixer diode mount is constructed from tinplate as shown in Fig. 4. A small strip ¾" x 3/16" is cut almost through at intervals of 1/16" to form fingers. The strip is then bent around a ¼" drill or similar size to the diode body. The seam is soldered, then the base of this section is soldered to the capacitor plate C15. Remove all burrs and tension the fingers to provide a firm fit on the diode body.

The capacitor is formed by a thin layer of teflon, polythene or P.V.C. tape between C15 and partition 2 (Fig. 4). The P.K. mounting screws land inside the ends of the two ¼" copper tubes, L11 and L12. The heads of the screws are insulated from C15 plate with small washers.

The diode pin contact may be salvaged from an old bakelite octal wafer socket or may be fashioned from a small piece of tinplate. Solder a length of 18 gauge tinned copper wire to the contact, bend as shown in Fig. 2 and solder to partition 2 in the signal trough-line. It is not advisable to use a good diode while soldering as it could be damaged by heat. Assemble the diode mount C15 and check for shorts before insertion of the diode.

Construction of the LO chain on the L section is straightforward. The holes in the partition shields for Q2-Q5 should be a neat fit. Bend the emitter and collector leads over at right angles before insertion, but take care not to rotate the leads. If the angle is incorrect straighten the lead and re-bend in the desired direction. The base lead is soldered hard up to the transistor case. This is important as base lead inductance degrades the performance of the stage.

There is no room to use a heat sink but this is not necessary as the manufacturer's data sheet states: "Soldering temperature not to exceed 300°C. for more than ten (10) seconds." Tin the chassis first, then use a hot iron as quickly as possible. I have removed and replaced one transistor several times with no detectable reduction in performance. Once the multiplier chain is operating satisfactorily, solder this section to the side of the trough-line and install Q5.

The i.f. pre-amplifier is constructed in a simple box (Fig. 5) and attached to the top of the converter with four ¼" x No. 2 P.K. screws. The lid is a press fit. A baseplate attached with P.K. screws completes the construction and is desirable to reduce radiation from the trough-lines.

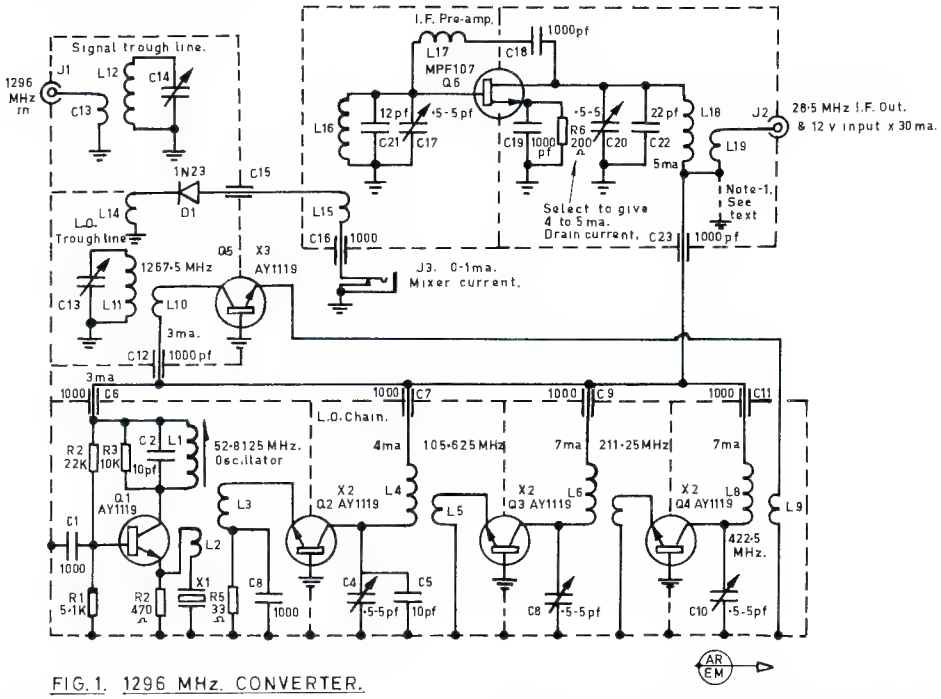

FIG. 1. 1296 MHz. CONVERTER.

C1, C3, C18, C19—1000 pF. disc ceramic.
C2, C5—10 pF. tubular ceramic.
C4, C8, C10, C17, C20 0.5-5 pF. tubular ceramic trimmers. (Available at 5c each, Hare and Forbes Pty. Ltd., 180 George St., Parramatta, Sydney, N.S.W., 2150.)
C6, C7, C9, C11, C12, C16, C23—1000 pF. ceramic feed-through.
C13, C14—2 BA or 10NF screws with lock washer and nut.
C15—Diode by-pass capacitor (Fig. 2 and text).
C21—12 pF. tubular ceramic.
C22—22 pF. tubular ceramic.
D1—1N21, 1N23 or other suitable v.h.f./s.h.f. mixer diode.
J1, J2—BNC or Belling Lee sockets.
J3—2.5 mm. miniature closed circuit phone jack.
L1—12 turns 28 s.w.g. 5/16 inch diameter slug tuned former.
L2—1 turn single strand hook-up wire, cold end L1 (see text).
L3—2 turns single strand hook-up wire, centre L1.
L4—5 turns 16 s.w.g. tinned copper, 7/16 inch inside diameter, winding length ½ inch.
L5, L7, L9—1 turn single strand hook-up wire, 7/16 inch inside diameter.
L6—3 turns 16 s.w.g., 7/16 inch inside diameter, winding length 3/8 inch.
L8—1¼ turns 16 s.w.g. tinned copper, 7/16 inch inside diameter, winding length 3/8 inch.
L10—1 inch collector lead of Q5 (Fig. 2 and text).
L11, L12—¼ inch outside diameter tube, 4¼ inch long, Fig. 2.
L13—½ inch length 18 s.w.g. tinned copper wire (see text).
L14—7/8 inch length 18 s.w.g. tinned copper wire (see text).
L15—7½ turns 28 s.w.g. enamel, close wound over cold end L16 (see text).
L16—17 turns 28 s.w.g. enamel, close wound, 5/16 inch outside diameter former mounted over C17.
L17—60 turns 35 s.w.g. enamel, progressive winding on 3/16 outside diameter slug tuned former (see text).
L18—17 turns 28 s.w.g. enamel, close wound, 5/16 inch outside diameter former mounted over C20.
L19—2 turns single strand hook-up wire over cold end L18.
Q1, Q2, Q3, Q4, Q5—AY1119 (Fairchild).
Q6—MPF107 (Motorola).
R1—5.1K ¼w. carbon.
R2—22K ¼w. carbon.
R3—10K ¼w. carbon (see text).
R4—470 ohm ¼w. carbon.
R5—33 ohms ¼w. carbon.
R6—200 ohms ¼w. carbon (select value to give 4-5 mA. Q6 drain current).
X1—52.8125 Mc. third overtone crystal (Pye).

ADJUSTMENT

LO Chain.—This is most conveniently adjusted before soldering to the trough-line. If a suitable g.d.o. or t.d.o. is available, the individual circuits may be tuned before wiring up the 12v. supply line. Connect a multimeter on the 0-10 mA. range from C7 to the chassis. Slowly bring the g.d.o. up to L4 until a reading of 1-2 mA. is obtained on the meter. Tune the g.d.o. for maximum indicated current, taking care not to exceed full scale by moving the g.d.o. away as required. The current peak indicates the resonant frequency of L4. The trimmer C4 should now be adjusted so that the resonance for this stage occurs at 105.625 Mc. The turns spacing of L4 may require adjustment if resonance occurs outside the range of C4. Pre-tune the remaining multiplier stages in a similar manner.

This method of adjustment has several advantages. Firstly by monitoring the collector current of Q2, this ensures the ratings of the transistor will not be exceeded, especially when using a valve g.d.o. with high output. Secondly as the application of power to the transistor changes resonance, this may be allowed for by running the collector current at the approximate value to be used in the circuit. Thirdly, many g.d.o's, particularly on the higher ranges, exhibit a very poor dip, but this method is extremely sensitive and not subject to false dips.

Connect C6 to the 12v. supply and C7 via a 0-10 mA. meter to the supply. Adjust the crystal oscillator tuning for maximum current indication which should be about 4 mA. The feedback coupling L2 should be as loose as possible consistent with reliable oscillator starting. If the coupling is too tight the oscillator may revert to fundamental operation or even free run.

It is unlikely that a receiver covering this range will be available to check these conditions. This can be overcome with the use of the normal Amateur-band receiver and a cheap signal generator. The signal generator, which

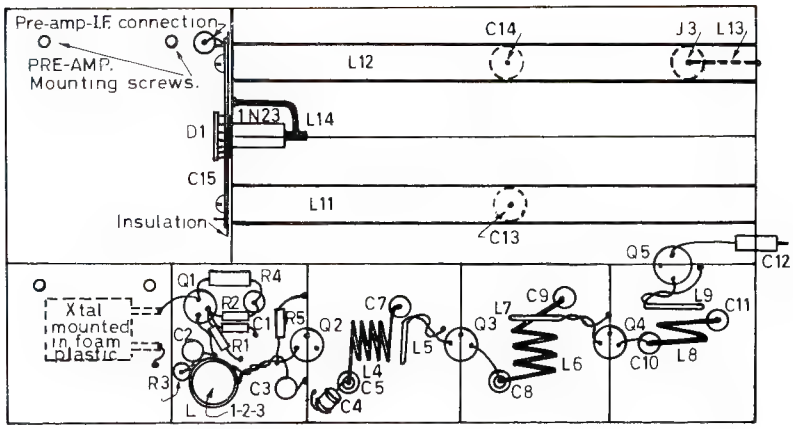

FIG. 2. CONVERTER LAYOUT.

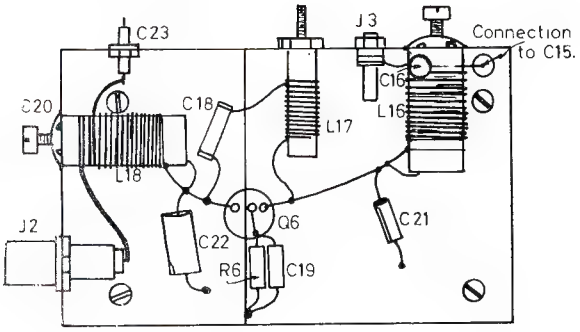

FIG. 3. PRE-AMP. LAYOUT.

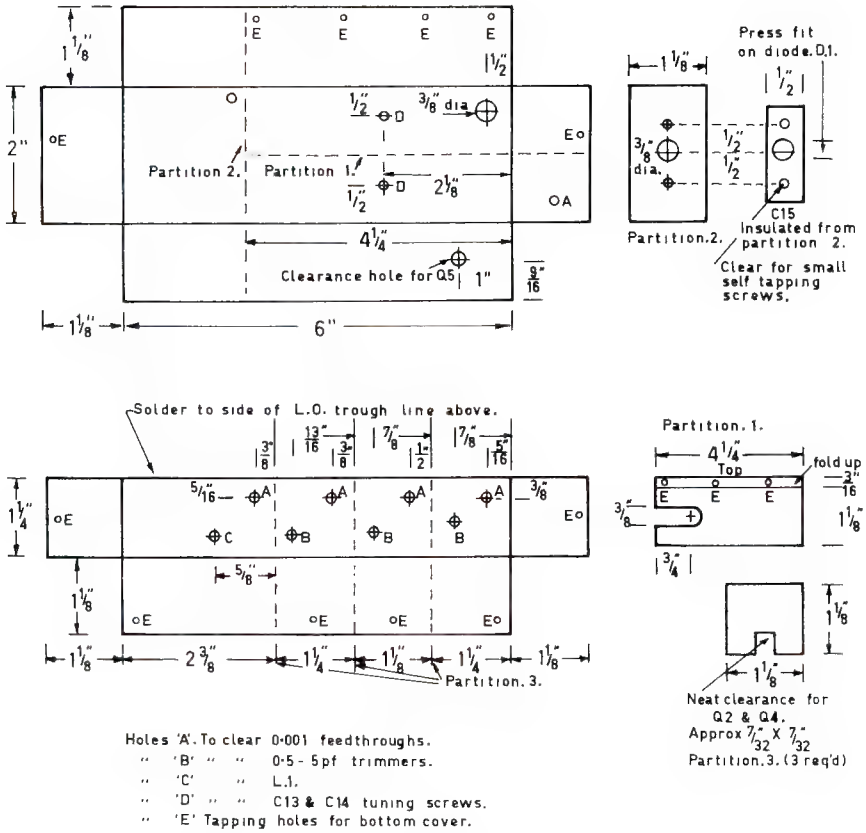

FIG. 4. SHEET METAL MAIN CHASSIS DIMENSIONS.

should be set to about 0.1v. output, is fed into the simple diode mixer, Fig. 7. A one-turn link on the end of a length of co-ax. is used to couple in the oscillator. The output of the mixer is fed to a receiver tuned for example to 14.0 Mc. Any frequency clear of stray pick-up may be used. For this reason, it is desirable to construct the mixer in a small screened box and use good co-ax. cable. Almost any diode will work but a greater sensitivity will be obtained using a detector diode or a high speed computer diode.

The difference from say the third overtone frequency 52.8125 — 14.0 Mc. is 38.8125 Mc. Some signal generators may not operate above 30 Mc., in which case the second harmonic of 19.406 Mc. may be used. When the signal generator is tuned to the correct frequency, a strong beat should be heard in the receiver with the b.f.o. on and carefully check for any spurious oscillations for at least ±1 Mc. If there is doubt that a beat is being produced by the crystal oscillator, this may be confirmed by detuning L1 slightly, or alternatively, sufficient frequency shift usually occurs if the hand is brought close to L1. If the spurious oscillations are found, it may be necessary to lower the value of R3 and also re-check the coupling of L2. This must be as loose as possible, consistent with reliable starting when L1 is tuned slightly to the "slow" side of the peak.

When the oscillator is operating correctly there should be no output on the fundamental frequency of 17.604 Mc. Check this by tuning the generator to 3.604 or 31.604 Mc. and searching for a beat. The latter frequency is the more desirable as there is less chance of being confused with a harmonic from the signal generator. This method may also be used in reverse to check the calibration of a signal generator at several points with known crystal oscillators.

When the oscillator is operating satisfactorily, adjust L3 coupling until Q2 collector current is 4-5 mA. L2 and L3 should now be waxed into position to prevent any movement. Connect the 0-10 mA. meter from C9 to the 12v. supply and tune C4 for maximum Q3 collector current. It may be necessary to adjust the turns of L4 for the peak to occur near the centre of the range of C4. Adjust L5 coupling to produce 6-7 mA. Q3 collector current. Proceed with the adjustment of L8 and L9, in a similar manner to give approximately 7 mA. collector current in Q4. It is unlikely there is sufficient range in C8 or C10 to tune to the wrong harmonic.

The oscillator section should now be soldered to the trough-line portion of the converter. Mount Q5 with the collector lead as shown in Fig. 2. The overall length of the lead to the top of the feedthrough capacitor should be about one inch. Apply power and peak C10 for maximum Q5 collector current. Adjust link L9 for 2.5 to 3 mA. Q5 collector current, re-checking C10 tuning. Mount the i.f. pre-amplifier unit and connect. Tune the LO cavity screw for maximum mixer diode current, which should be 0.5 to 1 mA. If the tuning of the early LO stages is checked, the tuning may appear very, very broad, being due to saturation in the multipliers. It is safer to check each

individual stage collector current except that L8 and C13 may be tuned for maximum mixer current.

If there is doubt about the operating frequencies of L8 and L11, these may be checked with Lecher lines by observing a dip in oscillator current when the lines are link coupled to the appropriate collector tuned circuit. Their use is described in most Handbooks. However, if the trough-line peak occurs with a gap of about 1/16 inch for C13, then all multipliers are probably operating correctly. This completes the LO chain adjustment.

I.F. Pre-Amplifier.—Apply power and if necessary adjust the value of R6 to give 4 to 5 mA. drain current. Connect the output of the pre-amplifier to the receiver tuned to the nominal frequency of 28.5 Mc. Normally the stage will oscillate over a considerable portion of L17's range. Adjust L17 until the oscillation ceases and tune to the centre of the "stable area".

Peak L16 and L18 for maximum noise in the receiver and re-check L17 again. It may help to link couple in an external signal to peak input and output circuits. Due to large variation in FETs it may be necessary to add or remove turns from L17. Final adjustments should be made for best noise figure.

Mixer.—As very few will have access to a good noise generator, a weak 1296 Mc. signal is necessary to optimise the mixer. The harmonic of a 144 or 432 Mc. transmitter will suffice. It is necessary to provide a resistive termination for the converter by construction of a simple unit shown in Fig. 8. Mount two connectors on a "U" shape bracket. Connect either 75 or 50 ohm resistors, depending on the co-ax. to be used, with the shortest possible leads. Only carbon composition type resistors should be used as the spiral track type become very reactive above about 30 Mc. Reduce the 432 Mc. transmitter power output to about ¼ watt and connect to the load resistor R1.

Providing a suitable mixer diode such as the 1N21, 1N23, etc., is used, it should now be possible to detect a harmonic from a 432 Mc. transmitter connected via the terminating unit. The type number of most s.h.f. mixer diodes is followed by a letter, e.g. 1N23F. The higher the letter, the lower the noise figure, and also the higher the price. As usual, a compromise is required unless one is obtainable free!

The noise figure is best optimised with a signal close to the noise level. Judgment by ear is uncertain so should be determined by measurement. Connect a low range a.c. voltmeter or v.t.v.m. across the receiver output. It may be necessary to couple directly across the output transformer via a capacitor in order to obtain sufficient noise level to give a reading on the voltmeter of say 0.5 volt. It is not necessary to remove the a.g.c. if the signal is kept very low.

Apply the signal to the converter and tune for maximum indication on the meter. If this exceeds more than about 1v. it will be necessary to either reduce transmitter power output or decrease the coupling between R1 and R2 on the terminating unit. If the signal level is much higher, it is difficult to detect the small changes which indicate if one is proceeding in the right direction.

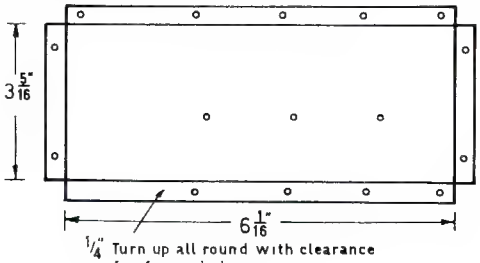

FIG.6. BASE PLATE.

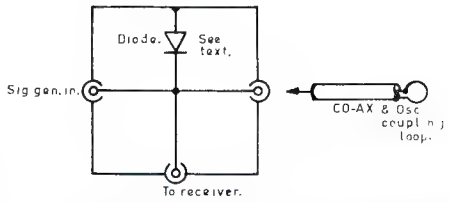

FIG. 7. DIODE MIXER FOR CHECKING OVERTONE OSCILLATOR PERFORMANCE.

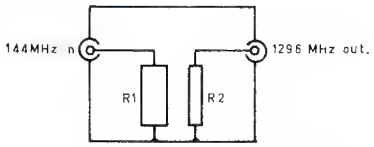

FIG. 8. SIGNAL SOURCE TERMINATION.

R1—½ or 1 watt, 50 or 75 ohm carbon composition.
R2—¼ watt, 50 or 75 ohm carbon composition.

The adjustments may now proceed. Tune the receiver a few kilocycles off the signal and if necessary adjust the receiver gain control to give the reference 0.5v. noise level reading. Re-tune to the signal and note the signal level. Make an adjustment and note the difference between noise and signal level. As some adjustments affect the overall gain it will be necessary to make small adjustments to the receiver gain control for 0.5v. reference noise level before noting the signal level. We are looking for an increase in signal over noise. When this exceeds a 2:1 ratio then reduce the signal level slightly and continue. This may sound tedious, but can be performed quite rapidly with practice.

The mixer trough-line may be initially peaked by tuning until a dip is noted in diode current, then screwing C14 out slightly so tuning this circuit higher in frequency.

The adjustments controlling the noise figure are:—

(1) Signal Trough: Normally tuned for maximum signal.
(2) Mixer Current: Alter injection in small increments of say 50 μA. to find the optimum level which is normally 0.2 to 0.3 mA., but will depend on the actual diode. The injection level may be conveniently controlled initially by detuning C10. Once the optimum level is found, the coupling of L9 may be adjusted to give this value with L8 peaked.
(3) Diode Coupling: The area enclosed by the link should be close to that shown in Fig. 2. Try altering the area by lengthening and shortening the lead in say 1/8 inch steps. Once again this will depend on the diode.
(4) Input Coupling: The area of the link controls the matching and should be close to that shown.
(5) I.F. Pre-amp.: The adjustment of L17 is critical for best n.f. and also the input coupling L15. Adjust L17 in small steps, re-peak C17 and C20 and check S/N. The number of turns on the coupling L15 should be varied also.

After optmising these adjustments as described, I was able to measure the n.f. on a commercial noise generator. It was found to be 9.8 db. which appears from literature available to be about as good as can be expected with a simple mixer using this type of diode.

POWER FEED

It will be noticed that the bottom of L19 is shown connected to the 12v. line. This proved to be a simple but effective expedient to feed power to the converter via the co-ax. i.f. cable, thus allowing the converter to be mounted close to the antenna. I use a modified BC454 Command receiver similar to that described in June 1968 "A.R.," but converted to 28-30 Mc. with link coupling to the input of the r.f. stage. The bottom end of this link is returned to 12v. supply line in the receiver. No degradation of overall noise figure or gain resulted, and also eliminates the

(Continued on Page 27)

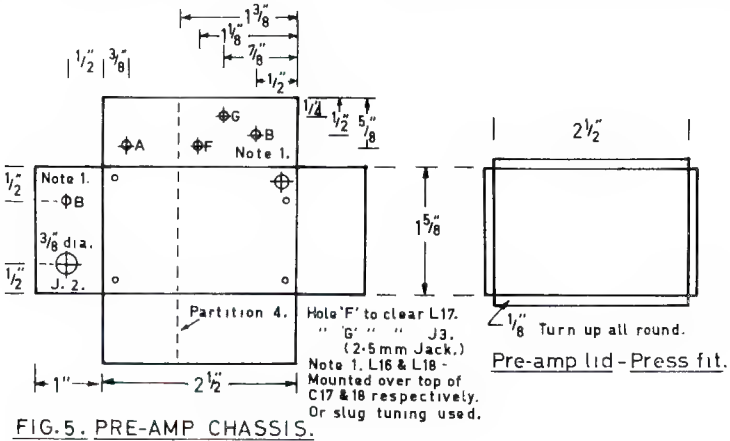

FIG.5. PRE-AMP CHASSIS.

Wireless Institute of Australia offers to Overseas and Australian Stations the...

COOK BI-CENTENARY AWARD

To mark the occasion of the 200th anniversary of the discovery of the eastern coast of Australia by Captain Cook in the year 1770, the Wireless Institute of Australia is issuing a Special Award to be known as the "Cook Bi-Centenary Award". It will be available free to any licensed Radio Amateur throughout the world who, during 1970, makes two-way radio contact with the required number of Australian Amateur Stations as set out below.

1970 is also the 60th anniversary of the founding of the Wireless Institute of Australia, the Australian Amateur body which has served the interests of Radio Amateurs since 1910 and is the world's oldest Radio Society.

Because of the special significance of the year 1970, a new prefix will be available for use by Australian Amateurs between 1st January and 31st December, 1970. At the option of the station operator during this period, the VK prefix may be replaced by the special AX prefix.

AWARD RULES

Operation.—Only Australian Amateur Stations using the special AX prefix may be worked for the purposes of this award. Contacts may be made on any band or mode available to Australian Amateur stations. Cross-band operation will not be permitted. No contacts made with ship or aircraft stations in Australian Territories will be eligible, but land mobile or portable stations may be contacted provided the location of the station worked, at the time of the contact is clearly indicated. Operators at all times must operate within the terms of their station licence. All contacts must be made during the period 1st January to 31st December, 1970, inclusive. Contestants may work each station once only during this period for the purposes of this award.

Requirements

Overseas Applicants.—Stations outside Australian Territory must contact 50 different Australian Amateur Stations using the AX prefix during the abovementioned period.

AX Applicants.—Stations within Australia must contact 100 different Australian Amateur stations using the AX prefix, working the required number of stations in each Call Area as per the list below, during the specified period:

AX1	(VK1)	3	Stations
AX2	(VK2)	30	,,
AX3	(VK3)	30	,,
AX4	(VK4)	11	,,
AX5	(VK5)	11	,,
AX6	(VK6)	6	,,
AX7	(VK7)	4	,,
AX8	(VK8)	1	,,
AX9	(VK9)	3	,,
AX0	(VK0)	1	,,
Total		100	Stations

Applications.—Stations applying for the Award are **not** to forward QSL cards, but instead should submit a list of the stations worked (in order of Call Signs by Call Areas) plus the following details of each contact: Date, time (GMT), band, mode, report. This list, certified by two other licensed Amateurs plus a statement to the effect that they have sighted the log entries of the applicant, should be sent to:

Awards Manager, W.I.A.
P.O. Box 67,
East Melbourne, Vic., 3002,
Australia.

Applications should be clearly marked "Cook Award" on the back of the envelope containing the check list plus the full postal address to which the award is to be sent. All applications are to be received at the above address no later than **31st December, 1971**, as no further entries will be accepted after this date.

Certificates will be forwarded free of charge by surface mail. However, if airmail return is required, eight IRC coupons must be included to cover the extra cost involved.

☆

VK3 NATIONAL PARKS AWARD

The Victorian Division of the W.I.A. offers an attractive certificate for working from or to 15 of the 22 National Parks in Victoria. It is a very pleasant and rewarding experience to operate from the various Parks and this is an appropriate time of the year to visit them since many operators are on holidays, and plenty of QSOs are to be had.

Awards are open to all VK and overseas Amateurs, and any operator who works 15 or more different Parks may apply for the award. There is no time limit.

Worked from Certificates have been issued to:

No. 1—H. L. Hepburn, VK3AFQ
,, 2—J. P. Downie, VK3APD
,, 3—H. G. Hodge, VK3HE
,, 4—R. E. Jordon, VK3AKJ
,, 5—H. L. Hepburn, VK3AFQ.

Worked to Certificates have been isseud to:

No. 1—L. Jackson, VK3XM
,, 2—A. Chandler, VK3LC
,, 3—K. Roget, VK3YQ
,, 4—I. Stafford, VK3XB
,, 5—M. Stafford, VK3KS
,, 6—E. Manifold, VK3EM
,, 7—H. L. Hepburn, VK3AFQ
,, 8—J. O. Bail, VK3ABA

AUSTRALIS OSCAR 5 LAUNCH DUE ON 9th JANUARY

In a letter to the Radio Amateur Satellite Corporation (AMSAT), the United States National Aeronautics and Space Administration (NASA) has agreed to launch the Australis Oscar 5 Amateur Radio Satellite as the secondary payload on the TIROS-M weather satellite launch. TIROS-M and AO-5 will be launched by a two-stage Delta rocket from the Western Test Range, California. The launch is currently scheduled for 1116 GMT ±10 minutes, on 9th January, 1970.

If all goes well, AO-5 will be ejected from the Delta about one hour after launch and will be in range of south-east Australia about two hours after launch. Western Australia should first hear the satellite about four hours after launch.

Details of when the satellite can be heard in each State may be obtained from the State Oscar co-ordinators (whose names appear on page 7 of October, 1969, "A.R."), and, as the launch date draws near, from the Divisional broadcasts.

Amateurs and S.w.l's intending to track the satellite should contact their state co-ordinators now, in order to obtain telemetry reporting forms.

If the AO-5 satellite goes into orbit as planned, it will be the fifth Amateur Radio Satellite put into space. Oscars 1-4 were built by Radio Amateurs in California. Australis Oscar 5 was built in Australia and is, therefore, the first foreign-built Amateur Radio Satellite to be launched by the United States. It is, incidentally, only the second satellite built in Australia. The first, WRESAT, was launched from Woomera in December 1967.

432 Mc. CONVERTER

(Continued from Page 8)

single conversion is shown in Fig. 1 **less** those components isolated by the dotted boxes.

As a service only to those Amateurs purchasing either kit, we have arranged to supply crystals suitable for this converter. These can be obtained by including a remittance for $5.80 together with the required crystal frequency when placing your order.

Inquiries should be addressed to:

432 Converter,
W.I.A. Victorian Division,
P.O. Box 36,
East Melbourne, Vic., 3002.

FOR THE MOBILE* OPERATORS

Being a shipboard operator, I have long been dependant upon accumulators, and as everyone knows the charge/discharge cycle of lead acid cells is as depicted in Fig. 1.

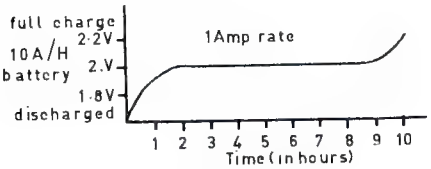

Fig. 1.

From this it can be seen that, except at time of full charge or discharge, the potential difference between the terminals of a lead acid cell remains constant under loads within the capacity of the cell (10amp./hours, etc.).

It follows, therefore, that **accurate** voltmeter readings will indicate battery condition.

In the case of a 12 volt battery, this means that when the meter reads 10.8 volts the cells are fully discharged. And, when under charge, the voltmeter reads 13.2 volts, the cells have reached full charge.

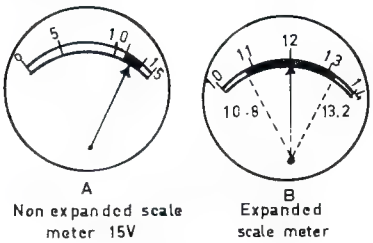

Fig. 2.

These small changes from the working voltage are not easily discerned on a 15v. or 20v. scale meter. However, they can easily be seen on an expanded scale voltmeter (see Fig. 2).

This is easily achieved with a 1 mA. meter (1000Ω p.v.), a 4K resistor and a Mullard zener diode BZY88/C10 (see Fig. 3).

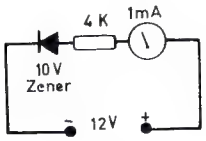

Fig. 3.

The meter will read 12 volts at the centre of the scale as at B in Fig. 2 and the condition of the battery can be immediately seen.

—Sqdn. Ldr. K. McCarthy, VK9AR, M.Y. "Pandemonium". P.O. Box 99A, Port Moresby, T.P.N.G.

---

* Incidentally, the word is **mobile** NOT **mobeel**—unless, of course, you're a **versateel** type driving a **meel** a minute **projecteel.**

RULES FOR GANDHI CENTENARY WRI AWARD 1969-70

To acquire this award (Worked Republic of India during Gandhi Centenary year 1969-70) any Amateur station, single operator, located in any I.A.R.U. region/country has to score at least 50 points for operation between 26th January, 1950, and 30th September, 1970—out of which at least one contact must have been made with VU2 or VU0 station during the period 1st Oct. 1969 to 30th Sept. 1970.

Scoring may be obtained by any method detailed below:

(a) Contacts with different VU2 stations between 26th Jan. 1950 and 30th Sept. 1969 count one point per contact.

(b) Contacts with different VU0 stations (other than those in "a" above) count ten points per contact.

(c) Contacts with different VU2 stations (other than those in "a" and "b" above) between the period 1st Oct. 1969 to 30th Sept. 1970 count four points per contact.

Example: Station VU2CZ and VU0CZ are considered as same station.

Contacts may be made in any mode, any authorised frequency and within the limits, rules and regulations prescribed in the country of operation of the Radio Amateur.

Applications for the Award with fees of 10 I.R.C's or Rs. 4/- Indian, must be mailed not later than 31st December, 1970, to the A.R.S.I., P.O. Box 534, New Delhi-1, India, along with proof of contact as stated below:

(a) By QSL cards, and/or

(b) By log extract certified by any member society of the I.A.R.U. (or its direct branches/divisions) and/or

(c) By certificate of verification of QSL cards by the member-society of the I.A.R.U. (or its direct branches/divisions).

The decisions of the Council of the A.R.S.I. in issuing the Awards shall be final and binding on the applicant. This Award rules do not alter the rules of the WRI Award in force.

☆

DIPLOME ALBERT SCHWEITZER

The French section from Department 68, in co-operation with stations TR8 of Gabon, issues the D.A.S. Award to all foreign Amateurs and S.w.l. who submit proof of communication as follows:

Contacts may be made over any period starting from 1st October, 1969, using all modes, h.f. from 3.5 to 29.7 MHz. 30 QSLs are required, 2 QSLs from Department 68, 2 QSLs from TR8, 26 QSLs from stations in the following cities: CE3 Santiago, CX1 Montevideo, DL7 Berlin, EA4 Madrid, G London, HB9 Bern, HK3 Bogota, I1 Rome, JA1 Tokyo, KH6 Honolulu, KL7 Cordova, LA5 Oslo, LU Buenos Aires, OE1 Vienna, OH Helsinki, ON Brusselles, OZ Copenhagen, PA0 Amsterdam, PY2 Brasilia, SM5 Stockholm, SP Varsovie, UA Moscow, VE3 Ottawa, VK1 Canberra, W/K3 Washington, XE1 Mexico City, YU Belgrade, YV5 Caracas, ZL2 Wellington, ZS1 Cape Town.

Applications to be made in the form of log extracts signed by two Amateurs. QSL cards to be in hand. Cost five IRCs plus your QSL card blank to A.R.S., F9KJ, 68 Flaxlanden, France.

☆

THE RARE ONES OF NEW ORLEANS CERTIFICATE

The Rare Ones of New Orleans, a group of Amateur Radio operators in the New Orleans area, are dedicated to promote friendship on the Amateur bands. A beautiful certificate is offered to all Amateurs who:

1—Contacts each of the eight "Critters".

2—Sends a QSL to each one you contact confirming the QSO.

3—Sends a log extract showing dates, times, etc., to the group requesting the certificate.

All QSL cards, log extracts, correspondence, etc., should be addressed to The Rare Ones, P.O. Box 29265, New Orleans, La., 70129, U.S.A.

AUSTRALIAN RADIO AMATEUR

CALL BOOK

1969-70 EDITION

NOW AVAILABLE

☆

Get your copy now from your Division or usual Supplier

☆

Price 75c

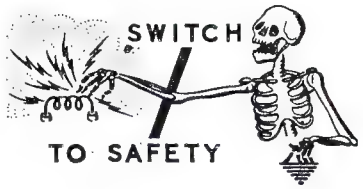

TECHNICAL ARTICLES

Readers are requested to submit articles for publication in "A.R.," in particular constructional articles, photographs of stations and gear, together with articles suitable for beginners, are required.

Manuscripts should preferably be typewritten but if handwritten please double space the writing. Drawings will be done by "A.R." staff.

Photographs will be returned if the sender's name and address is shown on the back of each photograph submitted.

Please address all articles to the

EDITOR "A.R.,"
P.O. BOX 36,
EAST MELBOURNE,
VICTORIA, 3002.

New Equipment

SENNHEISER MD411 MICROPHONE

Designed for high quality voice communications and better p.a. and tape recordings, with the following features: Three impedances (switchable): high, 25K ohm, medium 800 ohm, low 200 ohm; super cardioid pattern; frequency range, 50-12,500 Hz.; desk stand supplied with microphone, also suitable for floor-stand mounting; windshield available for windy locations (MZW411); may be used with any transistor or valve recorders; two required for stereo recordings. Accessories: MZH21 flexible shaft; MZS142 floor-stand (collapsible), MZA216 thread adaptor $\frac{3}{8}$" to $\frac{5}{8}$". Price $32.79 plus sales tax if applicable.

Further information from R. H. Cunningham Pty. Ltd., 608 Collins Street, Melbourne, Vic., 3000.

BI-MESAR POWER TRANSISTOR

Fairchild Australia Pty. Ltd. have just released the first Bi-Mesar power transistor in Australia.

It is the 2N3055, a high power silicon transistor and uses the new Fairchild developed process called Bi-Mesar.

Bi-Mesar is a high-volume, low-cost process producing exceptionally reliable power amplifiers and switches. As the name suggests, this process uses a double (Bi) epitaxial growth, with a Mesa collector-base etch, and a Planar (AR) emitter-base.

Key features of Bi-Mesar power transistors are:

(1) High forward and reverse-bias safe area;
(2) Leakage levels approaching planar structures due to an exclusive Vapox protection of the mesa collector-base junction;
(3) High voltage;
(4) Typical frequency response of 2-7 MHz., and
(5) Excellent switching performance, both in speed and saturation characteristics.

Further information can be obtained from Fairchild Australia Pty. Ltd., 420 Mt. Dandenong Road, Croydon, Vic., 3136.

CENTRE PIECE FOR SPIDER QUAD

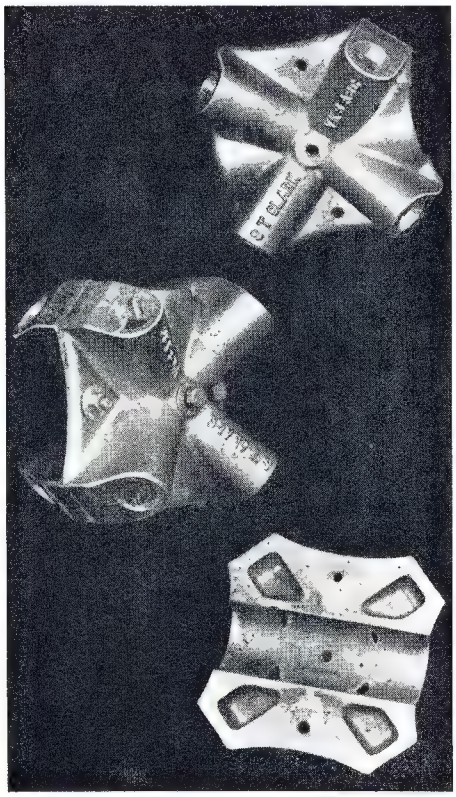

A cast aluminium alloy centre piece for spider (boomless) quad aerials has recently been developed in Australia. It is designed to fit tube type supports 1.9 inches in diameter ($1\frac{1}{2}$ inch water pipe or similar).

Each of a pair of castings accepts bamboo, metal or fibreglass spreaders up to 1.062 inch diameter at the butt. Individual halves of the quad aerial can be completed on the ground before it is fitted to the supporting tube.

Galvanised bolts pass through clearance holes in one piece into tapped holes in the other; after tightening upon the support, nuts and washes are fitted to lock the bolts in place. The complete assembly measures 6" x 6" x $4\frac{3}{4}$" and weighs 4 lb. 6 oz.

Available, complete with bolts, nuts and washers, for the modest price of $10 plus $1 packing and postage from S. T. Clark, 26 Bellevue Ave., Rosanna, Vic., 3084.

LOG BOOK

IS NOW AVAILABLE

Larger, spiral-bound pages with more writing space.

Price 75c each

plus 17 Cents Post and Wrapping

Obtainable from your Divisional Secretary, or W.I.A., P.O. Box 36, East Melbourne, Vic., 3002

1296 Mc. CONVERTER

(Continued from Page 24)

problem of a separate battery feed. The 144 Mc. converter is likewise adapted so that to change from 144 to 1296 Mc. it is only necessary to change the i.f. cable, which is very convenient for portable work.

If it is not desired to modify the i.f. receiver, or is a valve type receiver, then an isolating capacitor and suitable choke may be used to feed the 12v. into the co-ax. in the more usual manner. If this feature is not required in the converter, return the bottom of L19 to chassis in the usual manner. The 12v. on the antenna connector of the i.f. receiver may prove embarrassing if coupled to a folded dipole, etc., and this can be obviated by fitting a slide switch on the receiver to return the link to chassis or supply as required.

CONCLUSION

The construction and adjustment of a simple but effective 1296 Mc. converter has been described in detail in the hope that its simplicity may encourage some of the d.c. boys to "have a go". No special test equipment is required and, with the exception of the mixer diode, uses cheap readily available components. VK4KE constructed a similar converter using silver plated brass and achieved almost identical results. There appears to be little advantage in silver plating other than appearance. Time permitting, it is intended to describe the construction of the varactor triplers and antennas used on this project.

"It says to broadcast the seeds"

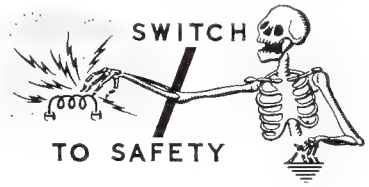

DX

Sub-Editor: DON GRANTLEY
P.O. Box 222, Penrith, N.S.W., 2750
(All times in GMT)

This month has been an average one for DX in this country, with some rather exceptional openings here and there. Ten metres has been doing some odd things such as being open to Europe as late as midnight local time in the Eastern States, fifteen has been average, twenty has had some good openings, particularly around 1900z when we have had some fine loggings from the Middle East and Central European areas. There is quite a lot of DX on forty and eighty metres, particularly in the c.w. segment, whilst the noise level has been mostly too high for any sustained activity on top band. I do note, however, that the first VK6 to W contact was held on Sept. 29, when VK6NK worked W5RTQ.

By the time this goes to press, we will be using the alternative prefix AX, issued for use at the discretion of the call-holder. Prefix hunting has become the latest form of rat-race now that most of the big time DX men have heard and worked all there is to work, and the use of a new prefix anywhere is good for a dogpile. The New Zealand boys report that they were rushed when the ZM prefix became operative over there, and it can be assumed that our DX boys plus the overworked QSL bureau managers will have a hectic New Year.

One short note here for the S.w.l's. It is very pleasing to hear on the grapevine that there has been a very good line-up of entrants in the 1969 VK/ZL Contest by the VK S.w.l's. The scores when Jock ZM2GX gets them all sorted out will be more than interesting, for I understand that several entries will go well into the five-figure bracket.

Recent publicity in a national electronics magazine in reference to goings on on the bands has not been of any help to our Amateur fraternity or the W.I.A. as a whole. Unfortunately publicity of this nature reflects on all Amateurs, regardless of whether or not they are involved, or whether the "goings on" are on the DX bands or not. The public, however, are no respectors of persons and on reading material of this nature, naturally point the finger at all of us, S.w.l. and Amateur alike. The editor concerned is quite entitled to write what he did, and were I in his position I would have done the same, fact remains that it should not have been necessary to draw attention to "licensed larrikins" as the aforementioned writer refers to them. To use another of his expressions, the boat should have been rocked long ago, before this state of affairs developed. We must face it, there is an element in Amateur Radio, particularly on the v.h.f. bands, which needs to be obliterated before the P.M.G., the commercial interests and anyone else who wants our bands, starts using this thing as an argument to take more of our very limited portion of the spectrum for their own use.

The editorial makes the point that there is a fear of being branded a P.M.G. pimp by some of those chaps who tolerate these goings on. This may be so, but one is entitled to take any reasonable action necessary to protect his property, and the bands certainly are our property. A call to the P.M.G. monitors, or R.I., particularly when the stations are active, will most likely be the best course of action. Give all the particulars you can, exact frequencies where possible, and if you can tape it, so much the better. There was a slogan in use prior to the last I.T.U. Conference to the effect that (in reference to the Amateur bands), if you don't use them, you'll lose them. I would suggest that if they are used by these few irresponsibles in the manner they are using them, we will lose them even quicker.

With the advent of the summer season in the southern hemisphere, we will no doubt have a few more DX-peditions on our hands. Already several are being reported, firstly there is a good chance that Clipperton will be activated some time in the new year with the call FO8EC. Watch for it, as it will go on with little or no advance publicity.

During the "CQ" World Wide Phone Contest on October 25/26 DJ6QT/CT3, I1MOL and 4MIA were active, and all cards are being handled by DX-pedition of The Month.

Another one for the distant days. DL7FT and a companion plan to visit Albania for the Easter week-end. This will most likely eventuate, and will be a bonanza for the DX boys. This report from W2NUT to LIDXA.

San Marino, a country which I heard way back in 1952, but have never confirmed, is now active with MI1 using 21308 (at 1500z) and 14209 at 2300z. His QSL to W4DQS.

W2GHK reports that logs from CR5SP are missing for the periods between Sept. 11, 1967, and Dec. 21, 1967, also Feb. 25, 1968, to April 6, 1968. No logs have arrived since June 30, 1968.

Activity from South Georgia is reported from VP8HO who has been using 14225, also 14204 a.m. Operator Rick, QSL via R.S.G.B. Also VP8JV is reported to be active for a year from mid-November, QSLs being handled by DX-pedition of the month.

Tibet is active once again, with AC4AH being worked on 14211 at 1112z, and asks for QSLs via W2MQ.

Mongolia still remains active with UA9VH/JT1 being worked on 14220, asks QSLs to Box 639, Ulan Bator. Also JT1AG "Dambi" had one heck of a pile-up on 14214.

Activity from Turkey is often treated as suspect, but one genuine station is Ted TA1NF, who has been active on 14180, at 2000z, QSLs to Box 699, Karakoy, Istanbul, Turkey.

One of the regular contributors to this column is the Long Island DX Association from New York. They shortly celebrate their 10th anniversary. The work this club has done in the past is far more than sending out a bulletin twice a month to members. We wish them well on this occasion, and look forward to our continued association with them.

Sunspot activity is still on the down grade, and the prediction for December and January is 88 and 87 respectively. The latest confirmation is for July with 88.

Roy ZM1AAT/K commenced operation from Raoul Is. on Oct. last. Unfortunately his transceiver fell into the sea whilst unloading, however despite these initial troubles, he manages to get on the air almost daily on the publicised frequencies, using c.w. and s.s.b. He has been on all bands, but is using 20 most evenings. V.h.f. equipment has been taken as well, and will be operating on 51.50 using 20 watts a.m. only. It is possible that his tour of duty will be extended to cover two years.

ZM1BN/A was due to commence activity on 19th Nov. for a period of three months from the Snares, however as there is a possibility of side trips to Bounty, Antipodes and Campbell Is., it may be well worth watching him. QSL to ZL2AFZ. The other N.Z. of interest is, of course, Lester ZM3PO/C who is currently on from Chatham Is. between shifts.

The permit for AP2MR to operate from East Pakistan was not received until too late, however he is now trying to get there for the first two weeks in January 1970.

Jack C2IJW, formerly VK9RJ, is active on 14170 or thereabouts daily at approximately 0600z, also on 7 MHz. at 0700z, and 28500 to 28600 at 0030z. His correct QTH for QSLs is Jack Wirth, Radio House, Nauru Is., Central Pacific.

The stations signing CW3BH and CW0AA were special calls from Uruguay during their recent contest, and count for prefix hunters only.

Re a previous paragraph pertaining to MI1 on San Marino, there is a note from Geoff Watts' DX news sheet to the effect that the QSL manager is I1GAD, although LIDXA show him as W4DQS. Probably the latter is for W stations only. His frequencies by the way are 7050, 14250, 21340, 28628, 14159 and 7060.

UPOL 16 and UPOL 17 are two floating U.S.S.R. stations in the Russian Arctic Zone. QSL to Box 88, Moscow.

ZD9BM from Gough Is. is now active on all bands, and is reported to operate on 14230 Mondays and Wednesdays. Heard here in VK at 0700z.

There is plenty of 5V activity these days, and of particular interest to VK is the reported sked between ZL1AV and 5VZDB at 14153 on s.s.b. at 0600z. I queried this call sign, however my own logging of him at 1950z on 14 MHz. soon cleared that up. 5V4JS is also on the air, often working W stations on the long path using 21279 at around 1700z.

Reports from the FR7 area state that FR7ZQ and ZU will be active for four months from Europa, that FR7ZL will go there also, and that FR7ZP will shortly leave Europa for Bassas DA, India.

News from KC4 says Ross Is. activity by KC4USV on 14284, QSL via K1NAP, also KC4USX who QSLs via K2BPP. From Palmer Archipelago we have KC4USP operating on 14225.

Alan ZD9BE reports that he returned from Gough Is. to his home QTH in England last August, and thus the current station signing ZD9BE is a pirate.

Gus W4BPD is now planning another DX-pedition, this time in the coming Spring season. This one is timed to last from 60-90 days and it is hoped to include Chagos, Blenheim Reef, St. Brandon, Algalea, Wizard Reef, Aldabra, Geyser Bank and possibly FH8, FR7, AC3 and AC5. Remember too that W2MZV is now QSL manager.

9U5CR is now active, usually around 14260 between 1800z and 2000z, with QSLs to ON6TO who has a new QTH: Edward de Jansstraat, 30, Sint-Andries, Belgium.

Trans Pacific DX tests on 160 metres are dated for 1330-1600 Saturdays on Nov. 29, Dec. 13, 27, Jan. 11 and Feb. 1 and 15. W/VE stations call CQ DX test during first five minutes and the following odd five minutes during the hour, DX stations call during the even five minutes. Oceania and Asian stations trying to contact W/VE east coast stations should start from 1130z. VKs are requested to use 1800-1860 kc.

Though not in the rare category, Canary Is. still excites interest, and two of the most active stations from there are EA8DV who has been operating on 10 metres of late, and EA8BB normally around 14210. The latter's QTH is Box 215, Tenerife, Canary Island.

If you are looking for Haiti, HH0DL checks into the I.S.S.B. YL net nearly every day on 14332 around 2100z, and 20 mx has been quite good here in VK2 at that time.

With the introduction some time ago of the five-band DXCC by the A.R.R.L., there has been a mad scramble for contacts on the lower bands. Here are some calls to look for on 80 and 40 mx: HR2PEV, CN8DW, EA6BN, EA8FF, EL2AK, FG7XX, HR1KAS, KP4AST, TG8IA, ZC4HS, CR4BC, CR7FM, EA9BR, OA-4BS, VP9GJ, 9HIK, JW3XK, LX1DW, TI2HP, VO1FX, VP2VP, 4U1ITU, YV5CIL, TF3MA, KZ5RF, VP9VK, 9Y4AA. Many of these have been heard or worked here in VK in the early hours, or in the case of the Pacific and South Americans, on 40 mx around 0700 to 1000z.

Jack VK3AXQ down in Tatura, reports working KC4USX on 20 at 0852z 599, operator Terry, QTH Williams Field, with QSLs to K2BPP plus two IRCs. Jack also worked FK-8BN (Guy) at 0758z with good copy at 18 to 20 w.p.m. c.w. Asks for QSL to Box 352, Noumea, New Caledonia.

Barry VK5BS reports working 9N1RA recently, and says QSL to K6OE. Has anybody got K6OE's QTH for the records as he is not in the current call book?

I mentioned recently some of the W stations now are concentrating on the lower bands, and one of interest is K3JH who uses a rotary quad on 80 mx.

Marion Is. rarely rates a mention these days, however ZS2MI is still active from there on 14297 from 0300 to 1600 daily. If no results on that frequency, he ranges up to 14320. My report says QSL to ZS6LW, and the operation is a.m. only. This report from the Pacific Is. DX net news service.

Recently stations in Honduras have had difficulty in receiving their QSLs. The reason for this is not stated, however there is now a new HR QSL manager, HR1JZ, J. Zelaya, Jnr., via Tropical Radio and Telegraph Co., La Lima, Honduras Republic, Central America.

Two silent keys are reported from U.S.A. They are W2ARB, John Julik, and K9EAB, Chas. Corne, the latter had been in an iron lung for the past 20 years.

I mentioned earlier in these notes that the trans-Pacific 160 metre tests are being held, as a matter of possible interest, although of no practical interest, is the fact that the trans-Atlantic tests are also being held on the Sundays following the Pacific tests.

AWARDS

There is only one this month, the Pacific DX Net Award. This is issued to those who work 25 official net members in at least 10 countries since Jan. 3, 1969. GCR list plus one U.S. dollar to KH6GLU. The net operates, as we have said before, on Tuesdays and Fridays, 0600-1000 on 14265 s.s.b.

And that brings us to the close of another issue, and from the editing point of view, another year. Notes appearing in this issue are by courtesy of Geoff Watts DX news sheet, LIDXA, ISWL magazine "Monitor", George ZL2AFZ, George Allen, Barry VK5BS, Jack VK3AXQ, Bernard Hughes from U.K., Newark News Radio Club, Mac Hilliard, Eric Trebilcock, Steve Ruediger, Pacific DX Net News, and my own observations.

My thanks to all who have assisted over the past year, and I wish all the very best to all concerned, trusting that the new year will be a happy one, and full of exotic DX.

73, Don WIA-L2022.

Overseas Magazine Review

Compiled by Syd Clark, VK3ASC

"BREAK-IN"

October 1969—

A Four Watt QRP Transceiver, ZL1AFQ. It is really more of a transmitter, receiver as the only common portion is the a.f. amp. A.m. or c.w. on 80 mx.

A Transistorised Two-Tone Test Oscillator, ZL1AU. Using two simple phase shift networks, it provides signals at approx. 1 and 2 KHz. for tests.

Some Notes on Choke Input Filters, ZL1HQ. As the title implies.

An Audio Peak Limiter, ZL1UI. You can increase your average output by about 10 db. by using one of these without flat topping.

Branch 29—A Brief History, ZL1HQ. Shows how a group of enthusiastic Amateurs can equip themselves with a clubroom and gear over a number of years. Perhaps we could arrange to follow suit in Melbourne.

Downward Ho, ZL4AC. A tale of the twenties.

Note. Subscriptions to "Break-In" can be arranged through the W.I.A. Ask your Secretary about it!

"CQ"

October 1969—

Inside the Electron Microscope, W2FEZ. The author takes his readers from the "Crook's" tube through modern electron optics and describes how magnifications of the order of 100,000 times and more can be achieved.

Build a Complete Six Metre Station, Part II. WA2NDM. Conclusion of the article on a six metre mobile which began in September issue.

The Haunted Ham, K3KMO. A humourous story of t.v.i. and its cure.

Have You Tried Triacs?, W2IYG. Actually I have! I bought a gadget recently which can be used to control the speed of my electric drill. This article tells you how to make such a device for yourself and do a few more tricks as well.

Instant Service Nets; WCARS, MWARS, and ECARS; WB6IZF. Traffic nets are an important part of American Amateur Radio. With our ban on third party traffic, we do not have such things.

The Reversi-Coupler, W1LE. An antenna tuner that covers 160 metres. That is the author's statement. Actually it does more by covering the other bands as well. Into the bargain, it is motor tuned.

A Junk Box Patch, K0GBT. This article describes a phone patch which can be built with a minimum cash outlay.

Australis Oscar 5 Progress, W3ASK. The latest gen on this project.

"CQ" Reviews the Drake 2-NT C.W. Transmitter, W2AEF. Apparently it works very well with a Drake 2-C receiver.

A Tri-band Quad and Two Metre Beam on the Same Mast, WB2FWS. Perhaps this will supply the answer to one of your problems.

"HAM RADIO"

April 1969—

Transmitting Mixers for Six and Two, K2ISP. With one of these and an 80 10 mx exciter you can participate in the fun on the v.h.f. bands. Tubes are used and complete details are given including p.c.b. layouts and very clear photographs.

A Programmable Repeater Identifier, W6AYZ. Now that VK is installing v.h.f. repeaters in some areas, this device should be of interest.

To Clip or Not to Clip, K6KA. What clipping does, how it works and how it can be used without splattering all over the band.

High Frequency Antennas, W2WLR. Many different types of antenna are described and the discussion all leads up to four types designed by the author. He claims some rather unusual properties for his designs.

Solid State Sampling Equipment for Slow Scan Television. D. J. Watson and S. M. K. Horne, VE3EGO. Who is on what frequency and when for the N.E., U.S.A. Adapted from an article in the Canadian Journal Electron, Jan. '69.

Blocking Oscillators, W6GXN. Useful pulse generator information.

Six-Metre Cubical Quad, W6DOR. At these frequencies rigid p.v.c. conduit or water pipe and fittings make a useful contribution to the finished product.

Wireless Point Loma, W6BLZ. History of a station in California which opened in 1906. In the early days communication between amateur and commercial was apparently not discouraged.

Flea Power Solid State Transmitter, K2ZSQ. Two transistors, a crystal and a few other components and bingo, 80 to 20 QRP.

Ideal Transmit-Receive Switch, K3KMO. He claims that all other T-R switches suffered from serious disadvantages which this one has eliminated. You can, according to the author, modify yours to do the same things.

May 1969—

Linear Integrated Circuit Applications, W1DTY and Darrel Thorpe. IC's for everything. Runs to about 24 pages.

Receiver Performance in F.M. Repeaters, K5ZBA. How to improve the talk-in range using shielding and tuned cavity filters.

Miniature R.T.T.Y. Converter, K9MRL. A standard circuit adapted to use an IC.

Homebrew Keyer Paddle, W3NK. For those mechanically inclined readers of VK1AU's recent article in "A.R." and a more elegant finish.

R.F. Activated Switch for Two Metres, by K2ZSQ. Designed for use on v.h.f. equipment, this is a piece of equipment which should appeal to VKs. It was adapted from a commercial design.

Integrated Noise Blanker, W2EEY. This unit makes use of three uL914 integrated circuits. It is claimed to be highly effective.

The Integrated Station, W1NLB. You readers of American Amateur magazines may have been intrigued by the advertisements of an organisation which calls itself "Signal One". In the earlier ads., the name of its parent, the National Cash Register Company, did not appear, but now it is stated to be part of the E.C.I. division of that company. The standard CX7 "Don't call it a Transceiver" is really a box full of tricks. All h.f. bands from 1.8 to 29.7 MHz. in bands one MHz. wide, with nixie read-out of frequency to 100 Hz., it uses all solid state components except for the final which is an R.C.A. 8072 conduction cooled tube running 300 watts input on s.s.b. It has two v.f.o's built in as well as an electronic keyer and every other gadget that an ardent DXer could need including the ability to simultaneously receive **two** signals of the operator's choice. I cannot find a price at the moment, but I think I did see it mentioned somewhere at around $US3,000, which means that if you are a worker you will need to win Tatts, the Golden Casket, State Lottery or the Big Philou reward money before you can import one. The duty and sales tax would probably buy you a Collins KWM-2.

June 1969—

Single Band S.S.B. Transceiver, W1DTY. Mostly solid state. KVG filter on 9 MHz. with v.f.o. on 5-5.5 MHz. and running 600 volts on a 6883 tetrode which gives about 50 watts p.e.p. output. It looks as though it could easily be modified to operate on other bands or even on two or three bands.

External Anode Tetrodes, W6SAI. Handy reference information on the popular range of Eimac tetrodes from the 4X150A developed in 1947 onwards.

Water Cooling the 2C39, K6MYC. These are popular on u.h.f., if you can get one at the right price. Sometimes the life can be short if they are pushed and the plumbing will reduce the risk of sudden failure.

A Modular FM Communications Receiver, K8AUH. More solid state stuff.

Crystal Control for the HW-100, K1GUU. If you have a requirement for operation on particular frequencies within the range of your transceiver, either fixed or mobile, you could find this article of interest.

Getting Started on R.T.T.Y., K6JFP. Circuits for sending and receiving r.t.t.y. plus some station improvement ideas.

Wiring and Grounding, W1EZT. Proper grounding is necessary for correct operation of many circuits. Ground loops can often cause unwanted deffects. This article tells you what you should do and what to avoid.

Top Loaded 80 Metre Vertical Antenna, by VE1TG. Loaded at the top with an umbrella and at the bottom with a coil. This 80 mx antenna is claimed to give excellent results.

C.W. Selectivity with Crystal By-passing, W2EEY. Circuits for adding selectivity for c.w. operation.

The Homebrew Art, W0PEM. How to "homebrew" equipment that works.

"OHM"—The Oriental Ham Magazine

Published by Phil Wight, VS6DR, editor Roy Chalu. This is the first issue of a magazine telling about the activities of Hams in the Orient. It is a slim volume published in Hong Kong and including a section on the activities of the Hong Kong Amateur Radio Transmitting Society (H.A.R.T.S.).

Hong Kong Reports, on the air from VS6. Listing some twenty-five odd Amateurs who are active from H.K. with a short resume of the gear they use.

Verification . . . I'll Stay Right Here, VS6AA. A humourous article about some of the lurks of "Ham Radio" and "DX-peditions".

FARF, VS6AL describes the Fully Automated Robot Fox. Something similar to the unit we used to use for our Hidden Transmitter Hunts a few years ago.

Ham Profile, VS6BE. Lyell Loutit is apparently a man of many parts as he is also VK2BE. He is an airline pilot now after having been a professional radio operator for some twenty years. Collins S line, 75S3, 32S3, 30L1. Operates mostly on 14, 21 and 28 MHz.

Quad Antennas. Dimensions for 20 mx quads ranging from 2 element with 1/8th wavelength spacing to a 6 element monster on a 60 ft. boom. All dimensions are for 20 mx.

DX, VHF. Report on the I.A.R.U. Region 3 Association meeting held in Sydney during Easter 1968.

"QST"

October 1969—

Amateur F.M. and Repeaters, W6TEE and W6GDO. This article discusses f.m. operating practices and the closely related subject of Amateur repeaters.

Diode Switch for V.H.F. F.M. Channel Selection, VE4HJ. Use some diodes as switches and the switch can be any place that is convenient.

A Junk Box Transistor Checker, W7MRX. Simple and effective it is claimed.

The Transistor Giant, VU2JN. 3.5-21 MHz. and running 75 watts input on c.w. or about 25 watts on phone.

An Etched Circuit Monimatch for Checking Your Antenna System, W1ICP.

A Dual Band Mobile Antenna, WA6KGP. Using a tuned trap system, this antenna covers 80 and 40 mx without switching mechanically.

A Solid State Sandwich for V.H.F., W1CER. Twin converters for 50 and 144 MHz.

The Swan Multidrive 2 Metre Antenna. W1HDQ writes about W6KZK's antenna.

Long Delayed Echoes ("QST" May 1969) has excited quite a bit of interest and prompted a number of writers to submit letters for publication. This issue (page 48) suggests that if you hear this phenomenon and record the effect on tape that the recordings can be analysed to provide useful information on a device known as a "Sona-graph". These machines, made by the Kay Electric of Pinebrook, New Jersey, U.S.A., are in use in Australia. If any reader has tape recordings for analysis and wants them analysed, the reviewer can probably put him in touch with someone with a machine.

Australis Oscar I. WA1IUO/WB2OHH. More dope for those who are interested.

So You Want To Win An S.S. Contest, by WA6IVN. The goal and the equipment required to put you in the running. You provide the "push".

"RADIO COMMUNICATION"

September 1969—

New Techniques for Amateurs, G3BOB. Sideband limiting, lincompex, diversity combining.

Some Notes on the G3LUB Bridge, G3PKV. How to get the most out of it.

SIAME Solid State Integrated Auto Morse Encoder, G8BTB. With no moving parts, this gadget automatically sends CQ/Test, Call Sign and possibly anything else you would like to build in.

Aerials—Planning and Rating Problems, by G2BVN. The things your city council may want to know.

Technical Topics, G3VA, regular feature. A disertation on the latest from here and there.

An Investigation into Table-Top Television Aerials, G3NMR. If you want to know which type a G reckons is best read this.

October 1969—

432 MHz. Single Sideband Transmitter, by G2AIH. Part I. of what is really two transmitters, one for 70 MHz., the British equivalent of our 50 MHz. band, and the other for 432 MHz. Valves are used.

Workshop Practice for the Radio Amateur, G3OMK. Some useful hints for the "do it yourself" fraternity.

An Add On Product Detector for a Transistor Receiver, G3SBA.

Dual Gate FET Converters for Two and Four Metres, G3VFD. 3N140, 3N141 and 2N3819s are used. Units are built in die cast boxes.

Teevision and Radio Interference Trends by G3VA. Figures to prove there is some.

Television Interference—Its Causes and Remedies, GW3RWX. How to rid yourself or your neighbour of it. Useful transmitting balun item.

Project Oscar, G2AOX. About Australis Oscar 5.

"RADIO ZS"

The journal of the South African Radio League. This is one of the smallest magazines published by a sister society. It usually consists of forty pages, each 5½ x 8¾ inch—smaller than "QST" and other American publications by half an inch on each side. It is attractively presented on good quality paper. Some of the articles appear to be a little remote from Amateur Radio. In the July issue we have:

A Remote Reading Electronic Thermometer, ZS6WI. Uses a bridge circuit with a thermistor in one leg.

Death in the Shack. ZS6HR describes the precautions every Amateur should take for the safety of his family, visitors and himself.

Resonant Impedance and Frequency Measurement, ZS6-191/7P8AJ. Describes an instrument known as an Antenna Noise Bridge. There is a commercial version on the market.

August 1969—

A High Performance Converter for Forty Metres, ZS6AUN. This is a project which should satisfy those of us who have been eyeing the new components on sale through the Disposals Group. It uses two MPF102s, a 2N706 and an OC170.

An Avenue of Friendship, ZS6GH. Diana Green gives us an insight into the thoughts of a lady operator.

A Sideband Package ZS Style, ZS6WI. For those who have already modified a receiver sideband, this is a suitable transmitter.

September 1969—

A Mobile 7 MHz. Rig, ZS6SX. Designed as a single band rig, this unit uses no transistors, only valves, d.c. input is a maximum of 35w. to a QQE03/12. A converter from 7 MHz. to a car radio as tunable i.f. is built in.

Use These Formulae and Calculations, by ZS6XK. Some time ago the author described a piece of equipment as using a component of 10 uH. and was chastised for it. He now tells all of his interested readers how to translate between X turns of Y wire on a Z size former into uH. and other useful hints as well.

"SHORT WAVE MAGAZINE"

September 1969—

Introduction to Logic Switching, G3TDT. The sub-title tells you what it is all about. "A design for an electronic keyer using integrated circuits".

Discussing Phased Vertical Antennae, G3DDN. A tri-band system giving directivity control by switching. Calculations, measurements and practical application.

Labgear 160-Twin Transmitter, G3VCJ. How to make it give out on 80 mx.

A practical 14-Centimetre Converter, G3EEZ. Tunable output within the range 24-30 MHz.

"73"

October 1969—

A Super Gain Antenna for Forty Metres, by W4NVK. Nine db. on 40 mx might be called "super".

FET Chirper, K6QKL. Signal source for peaking converters for optimum signal-to-noise ratio.

The Inside Info on Alexander Graham, by W2FEZ. How the telephone really works.

Leaky Lines, K2AGZ. Similar to "Grumbles" but by a licensed Amateur.

Scope Calibrator, W1OLP. Gadget you can build to improve your scope.

Vidiots that have known me, K1YSD. Sense of humour test, if you flunk, go back to 11 mx.

The Protector, WA0HKC. Protects your gear from line voltage surges.

Slower Tuning Rates for Older Receivers, W4RNL. Just like "band-spread".

Positive Identification of Calibrator Harmonics, K5LLI. Keeps you off 6950 and other poor DX bands.

Adapting A.M. Transmitter to F.M., WA-4UZM. Good heavens, is everyone going v.h.f. f.m.

C.B. Sets on Six, WB2FHW. No need to junk that C.B. rig when you get your Tech. licence.

Proportional Control Crystal Oven, W2CLL. You will need this for Moonbounce and such.

A Crystal Filter Phasing Control, W2LT. Look at the i.f. response and be amazed.

Grounded Grid Filament Chokes, W2IK. You need these for linear amplifiers.

Equipment Cabinets with Style, W2OLP. Make it look commercial.

V.H.F.-F.M., Part I., WB2AEB. Advantages and practices. When?

Bring Back the Q Multiplier, W8RHR. Invaluable for c.w., notches out carriers too.

The C.R. Beam, WA4FDQ. Two metre corner reflector beam.

The A.R.R.L. Board and Amateur Radio, W7ZC. Ex A.R.R.L. Director evaluates meeting.

A Cheap and Easy Power Supply, K4FQU. For a sideband transceiver.

Getting Your Extra Class Licence, Part IX., Modulation. By "73" staff.

Ham Jamboree, WB6IZF. Talks about the Jamboree on the Air.

Operation Cat's Paw, W5CA. The tale of two kitties.

Knight V-107 for Six and Two Metres, by K6GKX.

Careers in the F.A.A., W6JTT. Get on the government payroll.

FOURTH

SIDEBAND GATHERING

HAMILTON

A.N.A. Week-end

24th and 25th JANUARY, '70

Contact Ern VK3AEM, Box 366, Hamilton, Vic., 3300, or on 3677 Kc. 10 p.m. nightly for information.

For Reliable Connections

OTL

RESIN CORE SOLDERS

O. T. LEMPRIERE & CO. LIMITED

Head Office: 31-41 Bowden St., Alexandria, N.S.W., 2015 and at Melbourne, Brisbane, Adelaide, Perth, Newcastle

OTL/73

REGULATED POWER SUPPLY

HEAVY DUTY—MAINS OPERATED

A Regulated Power Supply designed basically for the replacement of storage batteries used in the design and testing of mobile radio equipment, and other laboratory, production testing, manufacturing and service installations.

TYPE PS 90

The regulator is of conventional design using a differential comparator to provide an error signal to control the operation of the four parallel connected power transistors via a voltage amplifier and two Darlington connected low-power transistors. Base current for the Darlington connection is supplied from a constant current source which may be adjusted to minimise the output impedance. The output voltage may be adjusted by a front panel control within the limits stated for each range.

An overload circuit, which operates if the output current exceeds 120% of full load current, is provided to turn off the regulator, thereby protecting both the regulator and the external circuit. A current sensing circuit is used to fire an SCR which completely removes base drive from the series transistors. Normal operation is restored by removing the overload and pressing the re-set button on the front panel. Thermal cutouts are used on each power heat sink for overload protection under excessive ambient temperature conditions.

SPECIFICATIONS

Input:	240V. plus or minus 10% 50 c.p.s.
Output:	Range 1, 5-8V. DC 20A max. Range 2, 10-16V. DC 17A max. Range 3, 22-32V. DC 10A max.
Regulation:	Load and Line 0.2% on all ranges.
Ripple and Noise:	Less than 20 mV. p.-to-p. on all ranges.
Output Impedance:	Less than 5 milliohms.
Overload Protection:	Fixed electronic trip-out at 20% over current on all ranges. Push-button re-set on front panel.
Circuitry:	All silicon solid state.
Metering:	Separate 4 inch voltmeter and ammeter.
Size and Weight:	18¼ in. wide, 14 in. deep, 12 in. high. Approx. 58 lb.

Made in Australia by

A & R Electronic Equipment Co. Pty. Limited

A & R-Soanar Group Company

44-46 Lexton Road, Box Hill, Vic., 3128

Telephones: 89-0238, 89-0239

Representatives in All States

N.S.W.: SOANAR ELECTRONICS PTY. LTD. 82 Carlton Cres., Summer Hill. Ph. 798-6999

QLD.: R. A. VENN PTY. LTD. 71-73 Doggett St., Valley, Bris.. Ph. 51-5421

S.A.: SCOTT THOMPSON PTY. LTD. 93 Gilles St., Adelaide. Ph. 23-2261

W.A.: EVERETT AGENCY PTY. LTD. 17 Northwood St., W. Leederville. Ph. 8-4137

NEW CALL SIGNS

JUNE-SEPTEMBER, 1969

VK1BH—W. R. Hempel, 33 Krichauff St., Page, 2614.
VK1NE—N. P. Eyre, 17 Rusden St., Garran, 2605
VK1ZFR—F. Y. Ranner, 3 Whitelaw St., Pearce, 2607.
VK1ZJB—S. J. Lowes, 10 Macleay St., Turner, 2601.
VK1ZKC—R. F. Casey, 20 Nelson Pl., Curtin, 2605.
VK1ZKQ—D. W. F. King (Cpl.), Flat 1, Block 4, Stuart Flats, Griffith, 2603.
VK1ZOL—M. G. Foster, 65 A'Beckett St., Watson, 2602.
VK1ZRN—R. W. Nash, 15 Richmond St., Macquarie, 2614.
VK1ZTA—T. W. Austin, 55 Gouger St., Torrens, 2607.
VK1ZUN B. S. W. Churchill, 16 Mertz Pl., Mawson, 2607.

VK2TV—W. G. Weiss, 4 Warah St., Ettalong Beach, 2257.
VK2VD—R. W. Bishop, Station 161-167 Woodville Rd., Villawood, 2163; Postal: C/o. British Insulated Callenders Cables (Aust.) Pty. Ltd. 15 O'Connell St., Sydney, 2000.
VK2VI—V. J. Gay, 13/248 Pacific H'way, Artarmon, 2064.
VK2VO—J. L. Thomason, 41 Oaks Ave., Dee Why, 2099.
VK2YS—P. W. Bowers, 58 Stanley St., Kooringal, 2650.
VK2AGN—A. A. Griffard, "Woodlands," 15 Prince St., Springwood, 2777.
VK2ASD/T—R. A. Girdo, 111 Cooper Rd., Birrong, 2143.
VK2ATJ—L. P. Crowe, 2A Clovelly Rd., Hornsby, 2077.
VK2AYU—W. N. Smith, 7 Pacific H'way, Murwillumbah, 2484.
VK2BBH—C. Dekker, 17 Smith St., Manly, 2095.
VK2BBK—R. A. Maitland, 3 Albany St., Gosford, 2250.
VK2BCS—C. C. Talbert, 6/43 Milson Rd., Cremorne, 2090.
VK2BDS—D. B. Shaw, O.T.C. Radio Station, Bringelly, 2171.
VK2BEE—E. F. Corton, 7 Neptune St., Revesby, 2212.
VK2BEG—E. W. Graham, Boundary Rd., Bathurst, 2795.
VK2BER—R. C. Everett, 212 Austral St., Temora, 2666.
VK2BHM—H. B. Milburn, 37 Baloone St., Narrabri, 2390.
VK2BJP—J. K. Olsen, 1/237 Darley Rd., Randwick, 2031.
VK2BJQ—J. H. Sutherland, 32 Cremorne Rd., Cremorne, 2090.
VK2BKU—G. C. S. Jones, 2 Hillside Cres., Epping, 2121.
VK2BLE—L. Groen, 21 Egan Pl., Beacon Hill, 2100.
VK2BLP—L. E. Peasley, 176 Loftus St., Temora, 2666.
VK2BMI—R. O. Lohr, 858 Henry Lawson Dr., Picnic Point, 2213.
VK2BPA—N. G. Williams, 43 Laura St., Banora Point, 2413.
VK2BRI—R. W. Lowry, Station: 89 Chandos St., St. Leonard, 2065; Postal: 21/26 Raglan St., Mosman, 2088.
VK2BTM—A. T. Monck, 27 Park St., Port Macquarie, 2444.
VK2BYC—Birrong and District Youth Radio Club, Station: 111 Cooper Rd., Birrong, 2143; Postal: P.O. Box 324, Bankstown, 2200.
VK2CAD—D. C. Reynolds, C/o. Earth Satellite Station, Moree, 2400.
VK2ZBJ—P. B. Webster, 25 Bayview Ave., Earlwood, 2206.
VK2ZCC—C. J. Bourke, 14 Birch St., Batlow, 2730.
VK2ZCL—C. J. Collyer, Station: Portable; Postal: Airtelu, R.A.A.F. Base, Richmond, 2755.
VK2ZEG—W. L. Laird, 93 Kentucky St., Armidale, 2350.
VK2ZFY—A. E. Kent, 19 Gloria Cres., Lake Heights, 2502.
VK2ZGX—C. G. Palmer, 15 Davidson Ave., Warrawee, 2074.
VK2ZHC—C. D. Hay, 48 Rockleigh St., Thornton, 2322.
VK2ZHI—G. A. Puckett, 9 Alexandra St., Hunters Hill, 2110.
VK2ZIS—T. A. McKeachie, 147 Powderworks Rd., Elanora Heights, 2101.
VK2ZJB—A. J. Golding, 53 Jamieson St., Gateshead, 2290.
VK2ZNI—P. T. Nicholson, 99 Copeland Rd., Beecroft, 2119.
VK2ZNQ—N. A. Cameron, 10 Clifford St., Muswellbrook, 2333.
VK2ZPC—P. J. Carter, 5 Bell Pl., Mt. Pritchard, 2170.
VK2ZQF—P. C. Nieuwendyk, 228 Margaret St., Orange, 2800.
VK2ZQG—P. J. Huntington, 6 Elimatta St., Lidcombe, 2141.
VK2ZRN—R. J. Butler, 19 Burke St., Swansea, 2281.
VK2ZRO—R. N. S. Stone, 4 Yarraga Pl., Yowie Bay, 2228.
VK2ZSF—S. F. Nolan, 102 Quigg St., Lakemba, 2195.
VK2ZTK—R. J. McCosker, Yagoona Hotel, 299 Cooper Rd., Yagoona, 2199.
VK2ZTT—C. J. Lamp, 121 Kiora St., Canley Heights, 2166.
VK2ZVF—E. C. Herivel, 16 Lindley St., Edgeworth, 2285.
VK2ZWU—J. D. Wolifson, 239 Eastern Valley Way, Middle Cove, 2068.

VK3II—F. A. J. Forse, 44 Dunloe Ave., Box Hill, 3128.
VK3PO—E. Thompson-Boyd, 17 Sydney Ave., East Geelong, 3219.
VK3QE—R. F. J. Caleo, 8 Ryder St., Niddrie, 3042.
VK3RG—R. M. Kiser, 3 Daracombe Ave., Kew, 3101.
VK3TN—J. H. Lehmann, 74 Dunnlop St., Mortlake, 3272.
VK3ZA—J. McL. Bennett (Lt.-Co.), "Tigimus," Somers, 3927.
VK3AAD—E. D. Buck, 263 Gooch St., Thornbury, 3071.
VK3AEL—N. L. Jenkins, 19 Rangeview Rd., North Balwyn, 3104.
VK3AFT—D. O. Spires, 4 Turnbull St., Sale, 3850.
VK3AGS—G. S. Sutherland, 6 Carinya Crt., Bendigo, 3550.
VK3AIV—M. Butler, Ironbark Rd., Yarrambat, 3091.
VK3AJX—W. H. Kelly, 58 Linn St., Bendigo, 3550.
VK3AKC—R. W. Wilkinson, 3 Harcourt St., Newtown, 3220.
VK3ANP—D. H. Waring, Cr. Murdoch and Cubbes Rds., Wangaratta, 3677.
VK3AOH—R. E. Hartkopf, 34 Toolangi Rd., Alphington, 3078.
VK3APB—M. J. Williams, 9 Monreith Ave., Flora Hill, Bendigo, 3550.
VK3ASN—K. J. Assender, 140 Collins St., Mentone, 3194.
VK3ASV/T—W. G. Francis, 31 Donald St., Morwell, 3840.
VK3AUZ—R. M. Adair, 19 Sanday St., Glen Waverley, 3150.
VK3AVJ—R. J. Jennings, 11 Dunbar Ave., Caulfield, 3162.
VK3AVR—D. C. Gray, 21 Dunlop Ave., Kew, 3101.
VK3AWW—R. F. A. Lopez, 16 Coac St., Broadmeadows, 3047.
VK3AXH—I. G. McDonald, 7 Pike Crt., Noble Park, 3174.
VK3AYQ—R. J. Greene, 22 Shackleton St., Belmont, 3216.
VK3AYV—H. W. Anders, 325 Waverley Rd., Mt. Waverley, 3149.
VK3AYZ—R. L. Cassidy, 68 Kernon St., Strathmore, 3041.
VK3BAE—C. Lindsay, Flat 4, 10 Daley St., Elwood, 3184.
VK3BAJ—U. H. Aalbers, 7 Reserve Ave., Mitcham, 3132.
VK3BAL—C. J. Kosina, 2 Ottawa Ave., Blackburn, 3130.
VK3BAN—F. H. Whitton (Rev.), 204 Churchill Ave., Braybrook, 3019.
VK3BAP—J. E. Nicholson, Flat 16, 254 Dandenong Rd., East St. Kilda, 3182.
VK3BAQ—R. F. Fisher, 241 Royal Pde., Parkville, 3052.
VK3BAS/T—R. G. Thomas, 35 Crow St., East Burwood, 3151.
VK3BAT—G. G. Keon, 2 Cowper St., North Essendon, 3041.
VK3BAU—R. M. Bruce, 49 Tooronga Rd., East Malvern, 3145.
VK3BAW—E. A. Williams, Raglan St., Sale, 3850.
VK3BAX—M. G. Hepner, 43 Bellarine St., Geelong, 3220.
VK3BBH—A. L. W. Haddrell, Glenburvie Rd., Whittlesea, 3757.
VK3BCA—J. A. Capaldi, Flat 4, 30 Shepparson Ave., Carnegie, 3163.
VK3BCD—E. G. Egan, Unit 2, 637 Blackburn Rd., Clayton, 3168.
VK3BCH—C. P. Hill, 8 Elvara Crt., Mulgrave, 3512.
VK3BCM—W. J. M. McAuley, 24 St. Ninians Rd., Brighton, 3186.
VK3BCN—C. V. Nelson, 149 Brougham St., Kew, 3101.
VK3CDP—D. A. Page, 24 Old Geelong Rd., Laverton, 3028.
VK3YAT—M. R. Jennings, 1 Hill Crt., Traralgon, 3344.
VK3YAU—Monash University Radio and Electronics Club, University Union, Monash University, 3168.
VK3YBI—I. C. Beulke, 183 Olive Gr., Mildura, 3500.
VK3YBJ—B. J. Andrews, 28 Outlook Dr., Burwood, 3125.
VK3YBM—R. J. Martindale, 6 Ilora Crt., Glen Waverley, 3150.
VK3YBZ—J. M. Stewart, Flat 4, 24 Auburn Gr., Hawthorn, 3122.
VK3YCP—P. A. Collen, Flat 4, 371 Dandenong Rd., Armadale, 3143.
VK3ZCG—G. S. Cox, Main St., Lindenow, 3865.
VK3ZFH—I. C. Nally, 28 Carbenna Pde., West Heidelberg, 3081.
VK3ZKN—E. G. Hutchings, Tahara, 3301.
VK3ZOQ—T. G. Rowan, 34 Elstone Ave., Niddrie, 3042.
VK3ZPP—P. B. Mill, 2 Ivy St., Parkdale, 3194.
VK3ZQH—F. A. S. McCowan, 21 Halliday St., Mt. Waverley, 3149.
VK3ZUI—S. Rosenbaum, 299 St. Kilda St., Brighton, 3186.
VK3ZWD—P. B. Carey, 468 Barkley St., Footscray, 3011.
VK3ZXN—A. Bindemania, 3 Maude St., Geelong, 3220.
VK3ZZO—E. J. Cusworth, 46 Travers St., Thomastown, 3074.
VK3ZZS—C. L. Lowne, 127 Vines Rd., North Geelong, 3215.

VK4AL—A. R. Tarbit, Station: Mt. Nebo; Postal: C/o. Post Office, Mt. Nebo, 4520.
VK4AZ—A. R. Renton, Presbyterian Manse, Allora, 4362.
VK4CA—P. C. Aldred, 15 Monmouth St., Morningside, 4170.
VK4EY—D. E. Laing, 33 Berrimilla St., Manly West, 4179.
VK4FU—F. E. Roden, 10 Livermore St., Rockhampton, 4700.
VK4IE—J. K. Edwards, 39 Robertson St., Sherwood, 4075.
VK4IN—I. R. Horrocks, 98 Duke St., Annerley, 4103.
VK4IW—K. A. Dickson, 4 Pullen Rd., Everton Park, 4053.
VK4NI—A. H. Nicholls, Cr. Mona and Richardson Sts., Edge Hill, 4870.
VK4NQ—H. B. Waldegrave, Hardy Rd., Birkdale, 4159.
VK4NY—A. S. Travaglia, 64 Heidelberg St., East Brisbane, 4169.
VK4PB—C. P. Littleboy, 17 Longman Tce., Chelmer, 4075.
VK4PV—P. J. M. Renton, 20 Harold St., West End, Townsville, 4810.
VK4QA—A. J. Aarsse, 159 Duffield Rd., Woody Point, 4019.
VK4QN—D. R. Ham, Station: Sparrow St., Longreach, 4730; Postal: P.O. Box 198, Longreach, 4730.
VK4TW—C. T. Ferris, M/S 264 Childers Rd., Bundaberg, 4670.
VK4UH—A. F. Kearney, 22 Muriel St., Maryborough, 4650.
VK4UP—T. B. Rodda, Carina Downs, Springsure, 4722.
VK4XX—G. Kempton, 41 Orient Rd., Yeronga, 4104.
VK4ZD—M. D'A. Richardson, 36 Rockburry St., Bald Hills, 4036.
VK4ZBQ—C. P. O'Brien, 12 Waratah St., Aitkenvale, 4812.
VK4ZDX—R. A. Bathgate, 53 Arrol St., Camp Hill, 4152.
VK4ZHA—W. H. Albrecht, 12 Fourteenth Ave., Kedron, 4031.
VK4ZHH—A. J. Murphy, 4 Esplanade, Pialba, 4655.
VK4ZHJ—H. J. Simpson, 13 Clayton St., Ayr, 4807.
VK4ZHS—D. H. Snell, 14 Mary St., West End, Townsville, 4810.
VK4ZJD—P. J. Donovan, 130 Gray Ave., Corinda, 4075.
VK4ZME—A. E. Morgan, Officers' Mess, R.A.A.F Base, Townsville, 4810.
VK4ZMS—R. S. Morton, 17 Crown St., Toowoomba, 4350.
VK4ZRC—R. C. Prior, 7 Parry St., Belgian Gardens, Townsville, 4810.
VK4ZRL—R. L. Reseck, Station, Eton Rd., Walkerston, 4740; Postal: P.O. Box 28, Walkerston, 4740.

VK5IF—I. B. Fisk, 64 Paringa Ave., Somerton Park, 5044.
VK5NB—J. A. McLachlan, 7 Austral Tce., Morphettville, 5043.
VK5OO—O. M. Lansbury, 17 Anderson St., Fulham, 5024.
VK5OT/T—M. D. Sobels, Station: 2 Dean St., Para Hills, 5096; Postal: P.O. Box 37, Para Hills, 5096.
VK5QB—D. J. Tanner, 8 Bridport St., Elizabeth Park, 5113.
VK5SJ/T—J. A. Hampel, 16 Mitchell St., Glengowrie, 5044.
VK5SN—K. G. Hurn, 4 Manoora St., Osborne, 5017.

VK5SR—South East Radio Group, Station: Glenburnie, 5291; Postal: P.O. Box 542, Mt. Gambier, 5290.
VK5SV—K. E. Pledger, Mitchel Ave., Riverglades Estate, Murray Bridge, 5253.
VK5TW—W. E. Giles-Clark, 355 Cliff St., Blackwood, 5051.
VK5TZ—J. B. Dennis, 9 Wainwright St., Clarence Gardens, 5039.
VK5ZS—1st St. Mary's Scout Group, Osborne St., St. Marys, 5042.
VK5CGA—J. M. Barry, 4 Chapman St., Blackwood, 5051.
VK5ZDI—D. K. Ireland, 109 David Tce., Woodville Park, 5011.
VK5ZDT—D. W. Thwaites, Station Cr. West and South Tces., Stansbury, 5582; Postal: P.O. Box 77, Stansbury, 5582.
VK5ZFI—G. E. Thomas, 115A Angas Rd., Westbourne Park, 5041.
VK5ZFM—L. J. Philips, 61 Lucas St., Richmond, 5033.
VK5ZFN—R. L. Baker, 18, The Strand, Brahma Lodge, 5109.
VK5ZGU—J. W. Coates, 28 Collingwood St., Port Pirie, 5540.
VK5ZHM—M. E. Hamilton, 9 Sussex St., Warradale, 5046.
VK5ZID—I. J. Dalwood, 60 Ilford St., Vale Park, 5081.
VK5ZJE—B. S. Went, 32 Hilliers Rd., Morphett Vale, 5162.
VK5ZJM—J. M. Clay, 94 Gawler St., Salisbury, 5108.
VK5ZLP—W. S. Kitto, 51 LeFevre Tce., North Adelaide, 5006.
VK5ZNJ—S. N. Johnston, 7 Hayles Rd., Elizabeth Park, 5113.
VK5ZRT—R. Battilana, 17 Queen St., Alberton, 5014.
VK5ZSK—J. D. Nunan, 1 Lasscock Ave., Lockleys, 5032.
VK5ZWM—W. D. Moulton, Station: 6 Coorara Ave., Payneham South, 5070; Postal: C/o. Radio 5DN, Tynte St., North Adelaide, 5006.

VK6DD/T—P. J. Beacher, 11 Crimea St., Morley, 6062.
VK6EQ—A. B. Hollebon, 76A Fifth Ave., Shoalwater Bay, 6169.
VK6GI—G. M. Summers, 171 Morley Dr., Morley, 6062.
VK6HD—M. E. Bazley, Flat 11, 13 Grant Pl., Bentley, 6102.
VK6JD—J. D. Hilton, R.F.D.S. Control Station, Meekatharra, 6642.
VK6RM—R. M. Tutton, 5 Errinbee St., Shelley, 6155.
VK6SS—S. J. Stewart, 39 Hancock St., Nollamara, 6061.
VK6CIA—J. T. Kelly-Hart, Station: Portable; Postal: C/o. Percival Publishing Co., 17 Elizabeth St., Melbourne, Vic., 3000.
VK6ZAB—H. Iffla, 1 Wandarrie Ave., Mt. Yokine, 6060.
VK6ZEU—P. V. West, 255 Fulham St., Cloverdale, 6105.
VK6ZEY—F. F. Teixeira, O.T.C. Satellite Station, Carnarvon, 6701.
VK6ZFU—L. Janes, R.A.A.F. Base, Pearce, 6085.
VK6ZFW—R. K. Green, 14 Doust St., Cannington, 6107.
VK6ZGG—F. T. Tuffin, 38 Elmwood Ave., Woodlands, 6018.
VK6ZGI—Perth Modern Snr. High School Radio Club, Roberts Rd., Subiaco, 6008.
VK6ZGJ—W. Coertse, 22 Treeby St., Coolbellup, 6163.
VK6ZKZ—D. V. Hambleton, 116 Astley St., Gosnells, 6110.

VK7AP—G. J. Polmear, 219 Newtown Rd., Newtown, 7008.
VK7BA—L. L. Jensen (Mrs.), Kayena, 7251.
VK7CX—B. R. Waldron, 62 Connaught Cres., Launceston, 7250.
VK7DL—Deloraine High School Radio Club, Lansdowne Pl., Deloraine, 7304.
VK7EM/T—W. J. Nickols, 4 Quinn St., Penguin, 7316.
VK7JV—J. Van Staveren, 30 Waveney St., Launceston, 7250.
VK7MB—A. C. McBurnie, 29 Benjafield Tce., Mt. Stuart, 7000.
VK7RZ—R. J. Verrall, 105 Arthur St., West Hobart, 7000.
VK7UV—R. B. Trollope, 5 Balmoral Rd., Kingston Beach, 7151.
VK7VK—B. J. Rieusset, 202 Carella St., Howrah, 7018.
VK7ZIF—I. R. Filby, 29 Rosny Esplanade, Montagu Bay, 7018.
VK7ZSF—S. D. Fraser, 137 Penquite Rd., Launceston, 7250.
VK7ZWK—W. F. Kitson, 80 Boxhill Rd., Claremont, 7011.

VK8JC—J. A. Cooper, Eldo Tracking Station, Gove, 5777.
VK8MA—W. R. Edwards, 2446 Alawa Cres., Darwin, 5790.
VK8ZCW—J. F. B. Wellard, Station: 4373 Bagot Rd., Darwin, 5790; Postal: P.O. Box 1137, Darwin, 5794.

VK9NI—A. A. McCullagh, "Hibiscus Flats," Norfolk Island.
VK9ZAL—R. N. Lee, Station: Lot 29, Blanch St., Rabaul, N.G.; Postal: C/o. Tutt Bryant, Rabaul, N.G.

CANCELLATIONS

VK1ZVT—D. S. Thomas. Transferred to Vic.

VK2CI—G. Kempton. Now VK4XX.
VK2II—A. W. Adams. Transferred to Vic.
VK2OT/T—M. D. Sobels. Now VK5OT/T.
VK2RR—A. A. McCullagh. Now VK9NI.
VK2TK—E. Thompson-Boyd. Now VK3PO.
VK2XU—W. L. Nye. Not renewed.
VK2WN/T—J. A. Hampel. Now VK5SJ/T.
VK2ADD—D. C. Reynolds. Now VK2CAD.
VK2BRL—R. F. A. Lopez. Now VK3AWW.
VK2ZBG—R. S. Graham. Not renewed.
VK2ZDY—B. B. Chatfield. Transferred to Vic.
VK2ZFF—F. F. Teixeira. Now VK6ZEY.
VK2ZKU—G. C. S. Jones. Now VK2BKU.
VK2ZMV—A. A. Griffard. Now VK2AGN.
VK2ZOE—P. W. Bowers. Now VK2YS.
VK2ZPY—R. A. Girdo. Now VK2ASD/T.

VK3CC—H. M. Bain. Not renewed.
VK3CR—A. A. Andross. Not renewed.
VK3PE—E. Sundstrup. Transferred to N.G.
VK3PM—N. G. Williams. Now VK2BPA.
VK3SC—W. G. H. Sargent. Not renewed.
VK3SF—R. M. Tutton. Now VK6RM.
VK3UL—A. H. F. Nickols. Not renewed.
VK3YH—R. R. Howe. Not renewed.
VK3AEN—J. P. T. Mantle. Transferred to N.S.W.
VK3AHO—W. R. Hempel. Now VK1BH.
VK3AOY—P. L. Mahan. Transferred to W.A.
VK3AQP—J. McL. Bennett (Lt.-Col.). Now VK3ZA.
VK3ATI—J. E. Reilly. Not renewed.
VK3AXS—E. Smith. Not renewed.
VK3AZT—P. P. Addis. Not renewed.
VK3ZAA—G. S. Sutherland. Now VK3AGS.
VK3ZAZ—S. R. Gregory. Transferred to S.A.
VK3ZBO—C. P. O'Brien. Now VK4ZBQ.
VK3ZDT—P. G. Thorne. Not renewed.
VK3ZCG/T—W. G. Francis. Now VK3ASV/T.
VK3ZEH—G. A. Hassell. Not renewed.
VK3ZER—R. W. Wilkinson. Now VK3AKC.
VK3ZFC—A. L. W. Haddrell. Now VK3BBH.
VK3ZFJ—E. G. Egan. Now VK3BCD.
VK3ZFK—R. F. J. Caleo. Now VK3QE.
VK3ZGI—J. A. Gilmour. Not renewed.
VK3ZHF—F. A. J. Forse. Now VK3II.
VK3ZHV—R. Greenwood-Smith. Not renewed.
VK3ZHX—H. E. Jones. Not renewed.
VK3ZLG—R. J. Green. Now VK3AYQ.
VK3ZLV—P. J. Seymour. Not renewed.
VK3ZMX—E. D. Buck. Now VK3AAD.
VK3ZOK—D. C. Gray. Now VK3AVR.
VK3ZOM—R. E. Hartkopf. Now VK3AOH.
VK3ZQQ—R. F. Casey. Now VK1ZKC.
VK3ZQY—M. G. Hepner. Now VK3BAX.
VK3ZSX—S. F. Lane. Not renewed.
VK3ZTI—P. D. McKenzie. Not renewed.
VK3ZRG/T—R. G. Thomas. Now VK3BAS/T.
VK3ZUB—A. R. Gray. Not renewed.
VK3ZUE—R. J. Jennings. Now VK3AVJ.
VK3ZUR—L. Janes. Now VK6ZFU.
VK3ZVE—P. A. Sweetser. Not renewed.
VK3ZVH—H. W. Anders. Now VK3AYV.
VK3ZWM—W. D. Moulton. Now VK5ZWM.
VK3ZZD—D. K. Morgan. Transferred to N.G.

VK4CL—L. C. Waterworth. Deceased.
VK4CO—G. Cole. Not renewed.
VK4EE—E. C. Bick. Transferred to Vic.
VK4EO—E. D. Eveslage. Not renewed.
VK4NE—N. P. Eyre. Now VK1NE.
VK4OX—R. C. Marschke. Transferred to Vic.
VK4RP—Clontarf Beach High School Radio Club. Not renewed.
VK4SE—S. S. St. George. Not renewed.
VK4SO—J. S. O'Rourke. Not renewed.
VK4YJ—G. W. Jane. Not renewed.
VK4ZAG—J. C. E. D'Alton. Not renewed.
VK4ZBO—A. R. Tarbit. Now VK4AL.
VK4ZDH—D. R. Ham. Now VK4QN.
VK4ZEP—P. C. Aldred. Now VK4CA.
VK4ZFR—F. E. Roden. Now VK4FU.
VK4ZIR—I. R. Milne. Transferred to Tas.
VK4ZJE—J. K. Edwards. Now VK4IE.
VK4ZMA—C. J. Collyer. Now VK2ZCL.
VK4ZOL—M. G. Foster. Now VK1ZOL.

VK5EQ—A. B. Hollebon. Now VK6EQ.
VK5FP—F. C. Purcell. Not renewed.
VK5MM—L. D. McKenzie. Deceased.
VK5TM—R. D. Martin. Transferred to N.G.
VK5ZAW—A. C. Wohlfarth. Not renewed.
VK5ZCK—R. L. Reseck. Now VK4ZRL.
VK5ZCQ—J. A. McLachlan. Now VK5NB.
VK5ZDZ/T—J. F. Ingham. Not renewed.
VK5ZED—J. B. Dennis. Now VK5TZ.
VK5ZEH—W. E. Giles-Clark. Now VK5TW.
VK5ZGV—J. B. Wilcox. Transferred to W.A.
VK5ZIE—R. B. Zielinski-Petersen. Not renewed
VK5ZJB—J. R. Beaumont. Transferred to Vic.

VK6AB—E. J. Boudell. Not renewed.
VK6PV—D. B. Shaw. Now VK2BDS.
VK6ZD—J. T. Kelly-Hart. Now VK6CIA.
VK6ZAS—S. J. Stewart. Now VK6SS.
VK6ZDC/T—P. J. Beacher. Now VK6DD/T.

VK7DA—D. H. Waldon. Not renewed.
VK7FG—C. H. Ranft. Not renewed.
VK7ZAT—J. R. Gumley. Not renewed.
VK7ZBW—B. R. Waldron. Now VK7CX.
VK7ZRV—R. J. Verrall. Now VK7RZ.
VK7ZUW—R. B. Trollope. Now VK7UV.
VK7ZWN/T—W. J. Nickols. Now VK7EM/T.

VK8MR—M. D'A. Richardson. Now VK4ZD.
VK8PT—C. C. Talbert. Now VK2BCS.
VK8ZCA—M. W. McLennan. Not renewed.

VK9GZ—G. Zepczyk (Fr.). Not renewed.
VK9HG—H. J. Hicks. Transferred to N.S.W.
VK9RD—R. A. Doty. Not renewed.

LOW DRIFT CRYSTALS

☆

1.6 Mc. to 10 Mc., 0.005% Tolerance, $5

☆

10 Mc. to 18 Mc., 0.005% Tolerance, $6

☆

Regrinds $3

THESE PRICES ARE SUBJECT TO SALES TAX

SPECIAL CRYSTALS: PRICES ON APPLICATION

MAXWELL HOWDEN

15 CLAREMONT CRES., CANTERBURY, VIC., 3126

Phone 83-5090

VHF

Sub-Editor: ERIC JAMIESON, VK5LP
Forreston, South Australia, 5233.

By the time you read this the greater part of the summer DX season will have been with us, there is little point in my telling you at great length how things have been as you already know by reason of Interstate contacts on 6 metres. At this stage of writing, of course, there have been the usual occasional openings to various States, and sound from the New Zealand t.v. station on 50.750 Mc. pops in occasionally in VK5. Stories are again coming in of working a thousand miles or more with 1 watt to a whip aerial, etc., and this, of course, is a great thrill at the time. However, let not the younger or less experienced think this is all that is needed. Be assured, that this sort of working is only possible effectively during a strong sporadic E opening. The stations which go on working the DX for half an hour or so when the band is folding are those running plenty of power to good efficient aerial systems, the others must content themselves listening to the local stations using this system working the DX in and out of the noise.

So, if you have been a bit disappointed with what you have worked this year, set yourself up with the best station your skill and finance will allow, 40 or 50 watts of r.f. (or more) with as many watts of audio (suitably clipped and filtered) if you are going to use a.m., an FET converter, at least a 4-element beam as high as possible, and you will be a force to be reckoned with on the band. The chap who uses his v.f.o. like a garden hose, swishing from one part of the band to another invariably misses out on contacts, too. If you have a good signal you can generally establish yourself in a position on the band which may only need you to move a few kilohertz either way to keep you in the clear at all times (with luck!).

Nothing in the way of any news or notes have come to hand from Interstate this month, so if the rest of you don't want to read mainly VK5 news, you had best get out the pens and send along some information. As advocated last month, I am keen on contests and portable operation, and a suitable form of advance information can be given through these columns if supplied early enough. You are reminded however of the VK2 V.h.f. and T.v. Group who are going to support the John Moyle National Field Day on 7th and 8th February by holding their V.h.f./U.h.f. Field Day at the same time instead of the usual New Year period. Some details of their Field Day were given in the last issue of "A.R." Referring to the John Moyle N.F.D., I am hoping for greater support than usual from this State, and hope this will be equally matched in other areas. The Western Zone of VK3 generally provides the main area of contact for VK5 though it is quite possible to work into Melbourne on these occasions. Let us all make a special effort during this AX year!

I did receive one note from Interstate just in time actually, from Rod VK5ZSD, who is presently holed up in Ryde, N.S.W. Our loss is the gain of VK2 because Rod was an active experimenter on 52, 144, 432, 576 and 1296 MHz., and has taken all his gear with him. VK6 will also be noting this move with interest as Rod originally came from there. As he becomes established we look forward to hearing more of his achievements in the field of u.h.f.

Probably about next March or April I would like to launch a message for transmission using 144 MHz., to be passed through as many States as possible and returned in the shortest possible time. This business of message handling by relay has been successfully done in New Zealand and other overseas countries, and I can see no reason why one could not be sent from VK5 through all the Eastern States and back again in a couple of days or so. Because of the large expanse of country between VK5 and VK6 without Amateur population, if 144 MHz. is used it will probably exclude the Westerners unfortunately. More details will be given next issue with proposed date of commencement.

Doug VK8KK, from Darwin, arrived in Adelaide ahead of schedule and has been meeting up with various friends since. Doug asks for some corrections to previously published information in the V.h.f. Notes that AP2MR (West Pakistan) is definitely not on. KR6TAB has been able to get on the air again following damage by a cyclone, and that VK9DJ is on the air operating with low power. He reports the Japanese beacon JA1IGY is still being heard, frequency varying between 51995 and 51998 KHz., using m.c.w. but with poor keying characteristics. It also appears most of the stations forming the "northern gang" putting signals into the Darwin area operate around 52010 KHz. so that wide areas of the band need not be tuned—only a few KHz. either side of this frequency. Peter VK8ZKA, Barry VK8DI, Barry VK8ZBQ and Colin VK8CM (ex VK2), together with Doug, form the more active group of 6 metre enthusiasts in Darwin. News has now been received that official permission is being granted to Peter VK8ZKA to relay the Sunday morning broadcasts of VK5WI in Darwin.

At the time of writing no information is available whether the VK6 beacon at Albany is operational. However, it is listed in the table of beacons as I would think it highly unlikely the VK6s would allow such a valuable beacon to be off the air during the peak of the DX season. The New Zealand beacon now appears to be operating on a frequency of 145.000 MHz. using c.w. and the call sign ZL3VHF. No other details as yet.

ZL2	50.750	Wellington t.v. sound.
VK2	51.740	Channel 0, Western N.S.W.
	143.750	Channel 5A, Wollongong.
VK3	51.760	Channel 0, Melbourne.
	144.700	Under construction.
VK4	51.750	Channel 0, Brisbane.
VK5	53.000	VK5VF, Mount Lofty.
	144.800	VK5VF, Mount Lofty.
VK6	52.006	VK6VF, Tuart Hill.
	144.500	VK6VE, Mount Barker (Albany).
	145.000	VK6VF, Tuart Hill.
	435.000	VK6VF (on by arrangement)
VK7	144.900	VK7VF, Devonport.
ZL3	145.000	ZL3VHF (Christchurch?)

Two metre beacons in VK2 and VK4 would seem to be all that is needed to complete a very favourable picture for communication on this band, and it seems a pity that these two States, both of whom are very favourably situated (particularly as far as VK5 is concerned) for DX attempts during periods of very high sporadic E activity on 52 MHz., should be lacking in this proven facility for predicting band openings. Such beacons would also be very useful to the boys across the Tasman in New Zealand to both of these States. It's over to you chaps!

For those of you who are really keen to work across to New Zealand, and particularly those looking for that elusive ZL4 for WASNZ on 6 metres, don't overlook the keenness of David ZL4PG, currently v.h.f. editor in "Break In". David operates on 51.553 MHz. running 120 watts of a.m. phone or c.w. to a 5-element wide-spaced yagi at 45 feet. Due to Channel 2 N.Z. t.v., he can only operate on Sundays between the hours of 0800 and 1000 E.S.T. or after t.v. close down, usually 2105 E.S.T. He will accept skeds any time in these hours. Except for Stan ZL4MB, who runs 10 watts on 52 MHz., David is the only ZL4 on 6 metres. On the 2 metre scene stations in the 100 watt class in Dunedin are Peter ZL4LV, Ken ZL4TAR and Hugh ZL4TAH, the latter running a 4X250B as an a.m. linear in his car on 144.140! Peter and David have high power extensions to run 1kw. on 144 and 432, and both usually operate on 144.100 exactly; they are the only stations currently very active on 432.

Both David and Hugh ZL4TAH are very keen to work ZL4-VK5 and are prepared to erect permanent high-gain antennas on 144, even giving some thought to such antennas as La-Port Rhombics, reputed to give 30 db. of gain. Best times appear to be 1650 to 1745 E.S.T. Hugh of course is keen to make use of his 32-element 75-ft. long yagi, with a gain of 21 db. So keep your ears on ZL4 during the summer months.

THANKS

To round off the notes, this month, I feel our thanks should go to Cyril VK3ZCK, for his efforts as V.h.f. Sub-Editor in the past. I know from past experience in writing notes for the VK5 journal just what a problem exists at times to get enough notes, and Cyril has certainly had to dig deep for some time now to keep his column together. I hope the v.h.f. fraternity will see to it that we continue to be allotted space in "A.R." each month by forwarding information of a national interest. Thank you, Cyril, on behalf of the v.h.f. gang, your past problems with lack of news is now right in my lap!

I hope everyone had a Merry Christmas and a Happy New Year, and with hopes of plenty of DX for 1970. Thought for the month: "If you want people to notice your faults, start giving advice."

73, Eric VK5LP. The Voice in the Hills.

MEET THE OTHER MAN

An Interstate Amateur was to have been featured in this segment this month, but probably due to copy closing several days early for the January issue, we have missed out. However, I have at very short notice asked another prominent VK5 Amateur to fill the gap and he has kindly consented to do so.

Bob Murphy, VK5ZDX, lives at Oaklands Park, 9 miles south-west of the city of Adelaide, at an elevation of some 60 feet. First licensed in 1961, Bob has been very prominent in VK5 Amateur affairs. He is a member of the W.I.A., was Secretary of the V.h.f. Group for three years, a member of the Amateur Advisory Council for one year. He has probably set a VK5 record in that he has provided a relay on 52.150 MHz. of the VK5WI Sunday morning broadcast for between 5 and 6 years, and conducts a lengthy call back afterwards. Bob is custodian of the 6 and 2 metre beacons, and was prominent in the design and construction of them. He is at present Technical Editor for the VK5 W.I.A. Journal, and has joined with Rob VK5RG in having two articles published in "A.R."

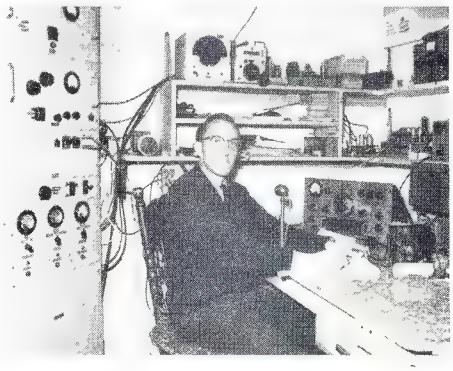

Bob Murphy, VK5ZDZ

Bob is currently operational on 52 MHz. using a Clapp multiplier v.f.o. and with an 829B running 100 watts to a 6-el. wide-spaced yagi at 55 feet. His 6 mx converter uses a grounded grid 12AT7 front-end. On 144 MHz. he again runs 100 watts originating from a mixer-type v.f.o. and fed through to a QQE06/40 in the final. A 10-element yagi at 65 feet ensures a good signal. The converter uses an E88CC cascode. The tunable i.f. is a much modified AR7 with 2 KHz. mech. filter, product detector and other mod. cons. The modulator runs 100 watts from Class B zero bias 807s. In addition to the above station equipment Bob has a specially constructed v.f.o. controlled 6 and 2 metre rig for portable operation which runs 100 watts on both bands plus a variety of good antennas to take out with him. Also mobile equipment is a feature of his operations, and he runs 36 watts to an 832A on 6 mx and 50 watts to a QQE03 20 on 2 mx. His mobile receivers use a common oscillator chain at 46 MHz. to 6AM6 on 6 mx and 6CW4 on 2 mx, the latter giving him a contact of 130 miles whilst mobile! Modified double converted 6-9 MHz. Command receiver for the tunable i.f.

Bob has worked all VK call areas except VK0, plus ZL1, 2 and 3, and JA1, 2, 3 and 5 on 52 MHz., while on 144 MHz. contacts across the border to VK3 and VK4. His present equipment is all a.m., but he is preparing for 6 and 2 mx s.s.b. gear using the filter method. His thoughts for the future include operations on 432, plans to increase his 2 mx antenna system to 28 elements (4 by 7 el. yagis), further operations of a portable nature (in conjunction with Wally VK5ZWW, he has won both the V.h.f. Field Days so far held), and will continue to push for operational beacons in all States.

— · · · —

CONTEST CALENDAR

Until 11th Jan.: Ross A. Hull V.h.f. Memorial Contest.
7th/8th Feb.: John M. Moyle National Field Day.
7th/8th Feb.: 36th A.R.R.L. International DX Competition (first phone week-end).
21st/22nd Feb.: 36th A.R.R.L. International DX Competition (first c.w. week-end).
7th/8th March: 36th A.R.R.L. International DX Competition (second phone week-end).
21st/22nd March: 36th A.R.R.L. International DX Competition (second c.w. week-end)

TRANSISTORS

CO-AX. FITTINGS, DIODES, RESISTORS, CAPACITORS

These and many other new components are available from the Victorian Division of the Wireless Institute of Australia. Members of any Division wishing to take advantage of this service may obtain a Components List by sending an S.A.S.E. (preferably 4" x 9") to:

DISPOSALS COMMITTEE
P.O. BOX 65,
MT. WAVERLEY,
VIC., 3149

SHOUT YOURSELF A XMAS BOX

that will last the whole year!

A subscription to "Break-In"

official journal of N.Z.A.R.T.

will cost you only $2.35.

Send it to: Federal Subscription Manager, Wireless Institute of Australia, P.O. Box 67, East Melbourne, Vic., 3002.

COMMONSENSE ELECTRONICS

Construction, useful theory, news, views and comments.

Send for Sample Copy

THE AUSTRALIAN E.E.B.

P.O. Box 177, Sandy Bay, Tasmania, 7005.

ATTENTION AMATEURS AND S.W.L's

NOW AVAILABLE

CRANK-UP TOWERS

GALVANISED, GUYED

45 ft. light 2-section, $99
60 ft. medium 3-section, $175
60 ft. heavy 3-section, $199
F.O.R. Perth, W.A.

Coming soon! 50 ft. Crank-up Tilt-over.

Free Samples

AX QSL CARDS VK
RUBBER STAMPS

Call, Zone, Name and Address $3.50
Call, Zone $2.25
Name and Address $3.00

K.K., 16 Cowrie Cres., Mt. Pleasant, W.A., 6153

REPAIRS TO RECEIVERS, TRANSMITTERS

Constructing and testing: xtal conv., any frequency; Q5-ers, R9-ers, and transistorised equipment.

ECCLESTON ELECTRONICS

146a Cotham Rd., Kew, Vic. Ph. 80-3777

Swan Electronics Service Co.

Accredited Distributor for
Swan, Hallicrafters, etc., Receivers and Transmitters

Specialised Service on all Swan Transceivers

14 GLEBE ST., EDGECLIFF, N.S.W., 2027. Ph. 32-5465

Correspondence

Any opinion expressed under this heading is the individual opinion of the writer and does not necessarily coincide with that of the Publishers.

C.W. AND A.O.C.P.

Editor "A.R.," Dear Sir,

In Dec. "A.R." VK3ZJC had some comments in opposition to c.w. as a requirement for the A.O.C.P.

I would point out that the I.T.U. makes c.w. obligatory to obtaining a licence. As v.h.f. is not normally a long distance means of communication, the administrating body in this country has waived this requirement for these frequencies. Our government, a signatory to the I.TU., feels also that c.w. is a national asset to the community and that this should be encouraged.

At the present reduced speed level, there is nobody—unless he is moribund (in which case he could not pass the technical section)—who cannot fulfil the requirement. With only about 40 sounds to learn, it is more simple than any foreign language to acquire.

Personally, I learnt it (the incorrect way it turns out) completely on my own because at that time there was no one in my bush locality who could tell me a thing about it.

Rather than ask for its exclusion, I would press for our pre-war requirement, when an operator had a compulsory twelve month period of c.w. only operation in order to become proficient in communication techniques. At that time a written request had to be made to the P.M.G. Department asking for permission to use phone and stating reason why phone should be used.

—Ken Gillespie, VK3GK.

THE REMEMBRANCE DAY CONTEST

Editor "A.R.," Dear Sir,

In my book, the only people interested in Contests are those who participate, yet we note that in the VK R.D. Contest each year, "per cent. participation" enters into the fray in order to determine a winner. How rediculous!!!

To determine the winner of a horse race, non-starters are just that—non-starters—and the same applies to motor car races—as a matter of fact to all "contests" except the R.D. Amateur Radio Contest of ours!!!

It's about time the winning R.D. Contest State was determined solely from the efforts of active participants only, and consideration for those not interested (be they at home, interstate or even overseas) forgotten!! (Cut out the dead wood!).

The total points of active participants for a State, divided by the number of participants aggregating that total, should determine the average score of each State—the winning State being that with the highest average from the aggregate of those who took part—forget about those who didn't take part!!! (Let's be a bit more realistic than we appear to be at present.)

—Eric Trebilcock, WIA-L3042

— . . . —

FEDERAL AWARDS

D.X.C.C.

As no amendments to members' totals were received for this issue, the listing remains as shown in December 1969 "A.R."

Please note that the address for Federal Awards is now:

Federal Awards Manager, W.I.A.,
P.O. Box 67,
East Melbourne, Vic., 3002.

No further mail should be forwarded to Box 2611W, G.P.O., Melbourne.

CHANGE OF ADDRESS

W.I.A. members are requested to promptly notify any change of address to their Divisional Secretary —not direct to "Amateur Radio."

SILENT KEY

It is with deep regret that we record the passing of—

VK3AOB—E. F. O'Brien.

MOBILE MARINE OPERATION

We have been advised by Alan Reid, VK3AHR, that he will be operating mobile marine over the Xmas/New Year period. He will leave Melbourne on 22nd December and return on 17th January, on the Italian vessel "Achille Lauro". Ports of call will include Sydney, Auckland, Papeete (Tahiti), Suva and Wellington.

It will be realised that Alan will cover much on the route covered by Captain Cook, 200 years ago, and the trip he is taking gives added interest to the mobile marine operation. At the time of preparing these notes, it is not known what call sign will be used, but we hope it will be AX3AHR. Operation is expected to be limited to 20 metres s.s.b. with possibly a little c.w.

HAMADS

Minimum $1 for forty words.
Extra words, 3 cents each.

HAMADS WILL NOT BE PUBLISHED UNLESS ACCOMPANIED BY REMITTANCE.

Advertisements under this heading will be accepted only from Amateurs and S.w.l's. The Publishers reserve the right to reject any advertising which, in their opinion, is of a commercial nature. Copy must be received at **P.O. 36, East Melbourne, Vic., 3002,** by **5th of the month** and **remittance must accompany** the advertisement.

FOR SALE: Collins 75S3B Receiver, excellent condition, $600 o.n.o. LM10 Frequency Meter with a.c. power supply, $45. C.R.O. Tube, 2 inch, type 902, $4. Heathkit Signal Generator, SG8, $20. Russell Bradshaw, VK3SX, Phone 82-2152 (Melb.).

FOR SALE: FR100B Receiver, FL200B Transmitter, FL1000 Linear, TH3J Beam with rotator and indicator. Together or separate. VK3AWD, Phone 99-1286 (Melb.).

FOR SALE: FR100B Receiver in mint condition, $225. L. Janes, No. 3 TELU, R.A.A.F. Base, Pearce, W.A., 6085.

FOR SALE: Power Supply, 2KV. 300mA. Pi-section L-C filter, $35. Power Supply, 1KV. 300 mA., 250V. 150 mA., 250V. low current, -250V. bias, 12.6V. A.C. and 6.3V. A.C., $35. Modulator, 90W. UM3 transformer, internal power supply, $35. VK3ZZY. Phone 50-4367 (Melb.).

FOR SALE: Pye 6v. Converter (solid state), run that 12v. mobile in your 6v. car, $20. Pye 6v. converter transformer (ex 3A), 30w. d.c. out, $5. Kevin Trevarthen, VK3ZDG, 28 Malcolm St., Blackburn, Vic. Phone 89-3523.

WANTED: Ham Band Receiver, preferably Drake 2A or 2B or similar. Also Leader LSG10 or LSG11 Signal Generator. Phone 560-0645 (Melbourne).

WANTED: SB101, KWM2, NCX5, etc., with power supply. Details and price to MacAskill, 3 Edwards Ave., Beecroft, N.S.W. Phone 871-1622.

WANTED. 522 Transceiver in mint condition. Also S s.b. Transceiver, 4-band, portable type, late model with schematic. For Sale: Heathkit Mohican all transistor, new, $100, or nearest offer VK4HK, H. Kinzbrunner, P.O. Box 59, Atherton, North Qld.

WANTED TO BUY: Modulation Transformers, multi-tapped Woden or similar. Must be 75 watts r.m.s. rating or greater, with sufficiently wide response to accept 10 db. feedback or more. Viva la A.M.! Tony Sanderson, VK3AML, Phone A.H. 53-1229 (Melb.). Thank you.

Bring in the whole wide world

REALISTICALLY with the REALISTIC DX 150 Communications Receiver

SW/CW/SSB/AM

Transistorised. All solid state

4 Bands .535 to 30 MHC (includes Broadcast)

240V AC or 12V DC operation

This is the BIG performance set that obsoletes tube receivers . . . a professional-looking set that appeals to amateurs and short wave listeners alike. The DX 150 gives long-range, world-wide realistic reception on 4 bands, including Broadcast. Fully transistorised—all solid state—no warm-up delays; the DX 150 will run on dry cells if current fails or is not available; will operate from a car's cigarette lighter or any 12V DC service. A 240V AC power supply is also built in. Over 30 semi-conductors—product detector for SSB/CW, plus fast and slow AVC—variable pitch BFO—illuminated electrical bandspread, fully calibrated for amateur bands—cascade RF stage—ANL for RF and AF—zener stabilised—OTL audio—illuminated "S" meter—built-in monitor speaker plus front panel jack for external (optional) matching speaker.

Realistic Performance
Realistic Price

$229·50

Attractive silver extruded front panel, solid metal knobs, grey metal cabinet, size 14⅛" x 9¼" x 6½".

CONSULT YOUR LOCAL RADIO DEALER, OR

MAIL THIS COUPON *today*

Please forward free illustrated literature and specifications on Realistic.

Name.....

Address.....

Weston electronics PTY. LTD. SYDNEY, AUSTRALIA

(A unit of Jacoby Mitchell Holdings Ltd.)

376 EASTERN VALLEY WAY, ROSEVILLE, 2069.
Cables and Telegraphic Address: 'WESTELEC,' Sydney. Phone: 40 1212

Hy-Q ELECTRONICS

Australia's largest independent crystal manufacturers

EXTEND THEIR PRODUCT RANGE TO INCLUDE

- Fundamental and overtone crystals from 1 MHz. to 125 MHz.
- 10.7 MHz. crystal filters for 25 & 30 KHz. systems.

SEND FOR FULL DETAILS IF YOU HAVE NOT ALREADY RECEIVED THEM

Hy-Q Electronics

Hy-Q ELECTRONICS PTY. LTD.

10-12 ROSELLA STREET,
P.O. BOX 256,
FRANKSTON, VICTORIA 3199.

Telephone 783-9611. Area Code 03.
Cables: Hyque Melbourne
Telex: 31630

BRIGHT STAR CRYSTALS

FOR ACCURACY, STABILITY, ACTIVITY AND OUTPUT

THREE MONTHS SPECIAL OFFER—

STANDARD AMATEUR CRYSTALS

STYLE HC6U HOLDER, FREQUENCY RANGE 9 TO 15 Mc.

0.01% $4.25
0.005% $5.50

Prices include Sales Tax and Postage

COMMERCIAL CRYSTALS

IN HC6U HOLDER, 0.005% TOLERANCE, FREQUENCY RANGE 9 TO 15 Mc.

$6.00 plus Sales Tax and Postage

Write for list of other tolerances and frequencies available.

New Zealand Representatives: Messrs. Carrell & Carrell, Box 2102, Auckland

Contractors to Federal and State Government Departments

BRIGHT STAR RADIO

LOT 6, EILEEN ROAD, CLAYTON, VIC., 3168 Phone 546-5076

With the co-operation of our overseas associates our crystal manufacturing methods are the latest

DURALUMIN ALUMINIUM ALLOY TUBING

IDEAL FOR BEAM AERIALS AND T.V.

★ LIGHT ★ STRONG
★ NON-CORROSIVE

Stocks now available for Immediate Delivery

ALL DIAMETERS — ¼" TO 3"

Price List on Request

STOCKISTS OF SHEETS— ALL SIZES AND GAUGES

GUNNERSEN ALLEN METALS

PTY. LTD.

SALMON STREET, PORT MELB'NE, VIC.
Phone 64-3351 (10 lines)
T'grams: "Metals" Melb.

HANSON ROAD, WINGFIELD, S.A.
Phone 45-6021 (4 lines)
T'grams: "Metals" Adel.

USEFUL ACCESSORIES

for the Radio Amateur

★ **SWR Meter K-109**. Dual impedance, switchable 52/75 ohms. Useable up to VHF. Has Amphenol type co-ax sockets (SO-239). **$19.50.**

★ **SWR Meter, K-108**. Smaller size, impedance 52 ohms. SO-239 sockets. Includes rod antenna and can be used as FS meter. **$17.00.**

★ **Field Strength Meter, K-101**. Has 200 uA. 2" meter, sensitivity control, telescopic pick-up antenna, socket for earphone, magnetic "stik-on" base. **$12.00.**

★ **Field Strength Meter, K-102**. Tunable, four bands 1.6 to 150 Mc/s., 100 uA. meter, five-section telescopic antenna. Very sensitive. **$15.00.**

★ **Multimeter, KEW-66**. 20,000 ohm/volt, AC/DC. Has overload protection, anti-parallax mirror. Switched ranges, 1V. to 1,000V., 50 uA. to 500 mA., 5 megohm, db. scale. Accuracy 3%. Size: 7¼" x 4" x 1¾". A very dependable high quality Multimeter. **$21.30.**

★ **FF-30DX** Yaesu three-section **Low-Pass Filter**, for TVI reduction. Cut-off freq. 35 Mc/s. —70 db. at 36 Mc/s. Maximum attenuation 47 Mc/s. and up. Suitable 50-80 ohms. Power 1 KW. P.E.P. at 75 ohms. Has SO-239 sockets. **$18.50.**

★ Polyphase (U.S.A.) **Co-ax Switches**. Complete with numbered switch indicator plate; SO-239 sockets at rear, and mounting template. PS-752, 2-position, **$15.00**: PS-750, 5-position, **$19.80.**

★ "SOLARI" **24-Hour Digital Read-out Clocks**, 230 volt, 50 c.p.s., light weight desk type, 7" x 3¾". Weight 1½ lb. (shpg. wt., 3 lb.). In beige or light grey. **$32.00.**

★ Also available, a large range of Amphenol type connectors, 50-ohm co-ax cable RG8U and RG58AU, H.D. antenna rotators, speech compressors, electronic keyers.

Prices include Sales Tax. Freight and Postage extra.

BAIL ELECTRONIC SERVICES

60 SHANNON ST., BOX HILL NORTH, VIC., 3129
Telephone 89-2213

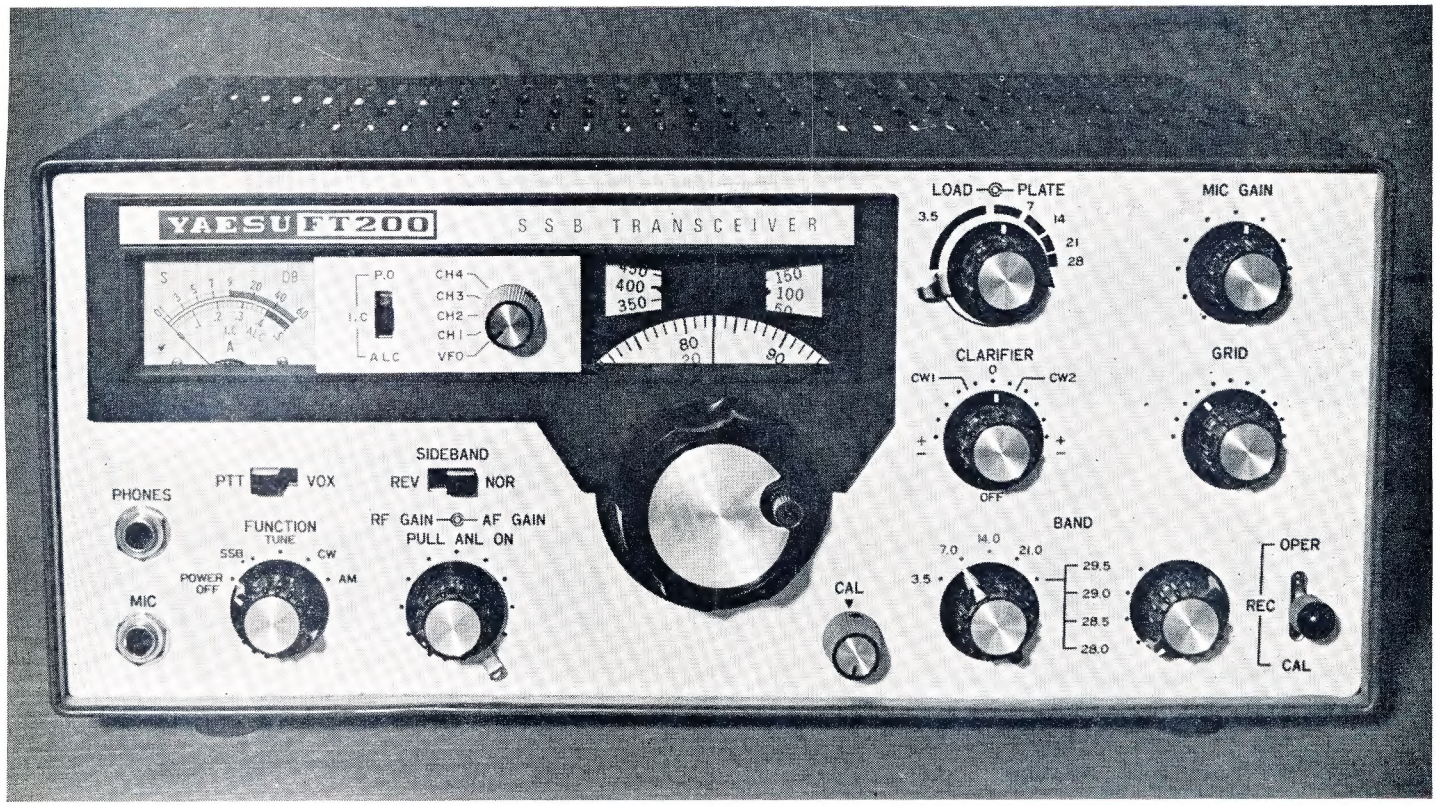

ECONOMICAL SSB! *from YAESU*

FT-200 FIVE-BAND TRANSCEIVER

A superb quality, low cost, versatile transceiver. Covers 80-10 mx, tuning range 500 Kc. each band. On 10 mx, crystal supplied for 28.5-29 Mc. (Crystals available optional extra for full 10 mx coverage.) SSB, CW, AM; with a speech peak input of 300w. Transistorised VFO, voltage regulator, and calibrator. 16 valves, 12 diodes, 6 transistors. PA two 6JS6A pentodes. ALC, AGC, ANL, PTT and VOX. Calibrated metering for PA cathode current, relative power output, and receiver S units. Offset tuning ±5 Kc. Uses a 9 Mc. crystal filter with bandwidth of 2.3 Kc. at —6 db. Selectable sidebands, carrier suppression better than —40 db. Sideband suppression better than —50 db.

Fixed channel facility optional extra, useful for net operation, skeds, etc.

Operates from conservatively rated separate 230 volt 50 c.p.s. AC power supply, FP-200, which includes built-in speaker. A 12 volt DC power supply is also available. Transceiver incorporates power take-off and low level R.F. drive outlets suitable for transverters.

Cabinet finished in communication grey lacquer. Panel, etched, satin finish aluminium.

Price, FT-200, **$345** inc. S.T.

Imported Yaesu matching Power Supply FP-200, with speaker, for use with above FT-200, $85 inc. S.T.

Other well known Yaesu Models: FTDX-100 Transistorised Transceiver, FTDX-400 Transceiver, FLDX-2000 Linear Amplifier, FLDX-400 Transmitter, FRDX-400 Receiver, FR-50 Receiver, FTV-650 6 Metre Transverter, FF-30DX Low Pass Filter, 600 c.p.s. CW Mech. Filter for FRDX-400, 600 c.p.s. CW Crystal Filter for FTDX-400. Also: SWR Meters, Co-ax. Switches, F.S. Meters, Co-ax. Conn., Hy-Gain (U.S.A.) Beams.

All sets checked before despatch. After-sales service, spares availability, 90-day warranty. All Yaesu sets sold by us are complete with plugs, power cables and English language instruction manual.

Sole Australian Agent:

BAIL ELECTRONIC SERVICES

60 Shannon St., Box Hill North, Vic., 3129. Phone 89-2213

N.S.W. Rep.: **A. J. ("SANDY") BRUCESMITH, 11 Ruby Street, Mosman, N.S.W., 2088.** Telephone 969-8342

radioparts PROPRIETARY LIMITED

CUSTOMER SERVICE

NEW STOCK JUST ARRIVED

"Rapar" AC BRIDGE

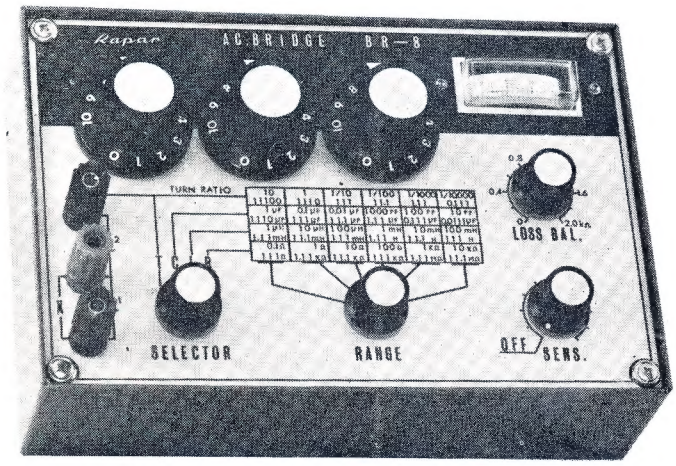

Model BR8

Measures:

Resistance, Capacitance, Inductance and Transformer Turns Ratios

Price $46.00 + 15% S.T.

SPECIFICATIONS:

Resistance: 0.1 ohm to 11.1 megohm in 5 ranges
Accuracy: 0.1 ohm to 10 ohm ±2% ±0.1 ohm
10 ohm to 5 megohm ±1%
5 megohm to 11.1 megohm ±5%

Inductance: 1 uH. to 111 H. in five ranges
Accuracy: 1 uH. to 100 uH. ±5% ±1 uH.
1 mH. to 111 H. ±2%

Capacitance: 10 pF. to 1110 uF.
Accuracy: 10 pF. to 100 pF. ±2% ±10 pF.
111 pF. to 111 uF. ±1.5%
111 uF. to 1110 uF. ±5%

Turns Ratio: To 11100 : 1 ±1.5%
Bridge Frequency: 1 Kc.
Power Source: 1 x 216 9-volt battery
Size: 7½" wide x 5" high x 3" deep.

RADIO PARTS PTY. LTD.

MELBOURNE'S WHOLESALE HOUSE

562 Spencer St., Melbourne, Vic., 3000. Phone 329-7888, Orders 30-2224
City Depot: 157 Elizabeth Street, Melbourne, Vic., 3000. Phone 67-2699
Southern Depot: 1103 Dandenong Rd., East Malvern, Vic., 3145. Ph. 211-6921

OPEN SATURDAY MORNINGS!